ridetech

INSTALLATION INSTRUCTIONS

Part # 15136110

Rear Coil-Overs

2006-2015 Mazda Miata

www.ridetech.com
812.482.2932

Please Read And Understand All Instructions And Warnings Prior To The Installation Of This Product.

THANK YOU

Congratulations on your new Ridetech product! It's an honor that you've selected the Ridetech brand to upgrade your ride. Our products are developed around quality and performance without compromise. We're confident you'll have many years (and miles) of pure driving enjoyment.
Thank you for choosing Ridetech!

Road Map

Exploded View & Parts Listing	3-4
Disassembly	5-7
Lower Shock Mount Installation	8
Upper Shock Mount Installation	8-10
Rear Coil-Over Installation	11-12
Setting Ride Height	13-14
Shock Tuning Guide	15-16

TORQUE SUMMARY	
LOCATION	TORQUE SPEC
Upper Shock Mount Nuts	24-34 ft-lbs
Upper Shock Mount Bolt	22-27 ft-lbs
Upper Coil-Over Bolt/Nut	45 ft-lbs
Lower Shock Mount Nut	75 ft-lbs
Sway Bar End Links	27-40 ft-lbs

EXPLODED VIEWS AND PARTS LISTING

COMPONENTS			
Item #	**Part #**	**Description**	**Qty**
1	24179998	6.9" Travel SA Threaded Shock	2
2	59040000	Take Up Spring, 4"L 2.5" ID - Preinstalled	2
3	59080400	Coil Spring, 8" 400 lbs/in - Preinstalled	2
4	803-00-199	M5-.8 x 18mm SHCS - Preinstalled (99050001)	2
	803-00-199	Retaining Ring; Wire - Preinstalled (038-01-006-A)	2
	803-00-199	Upper Spring Retainer - Preinstalled (234-14-200)	2
	803-00-199	Preload Adjustment Nut - Preinstalled (234-15-200)	2
	803-00-199	Delrin Spring Washer - Preinstalled (70010828)	4
5	90001473	Rear Upper Shock Mount - Driver (Shown)	1
6	90001474	Rear Upper Shock Mount - Pass	1
7	90001475	Rear Lower Shock Mount Bolt	2
8	90001476	Rear Upper Mount Cap	2
9	90001477	Shock Spacer, Rear Upper	4
10	90001478	Contoured Washer	4
11	90002042	Aluminum Spacer, .625"ID	4
12	90002529	Spring Divider - Preinstalled	2
13	99007234	O-Ring	2
14	99115013	M10-1.25 x 29mm Stud - Preinstalled	4

HARDWARE KIT: 99010288			
Item #	**Part #**	**Description**	**Qty**
15	99142002	M14-2.0 Nylok Nut	2
16	99621040	5/8"-18 x 4 1/2" Hex Bolt	2
17	99622005	5/8"-18 Thin Locknut	2
18	99623004	5/8" SAE Flat Washer	4

EXPLODED VIEWS AND PARTS LISTING

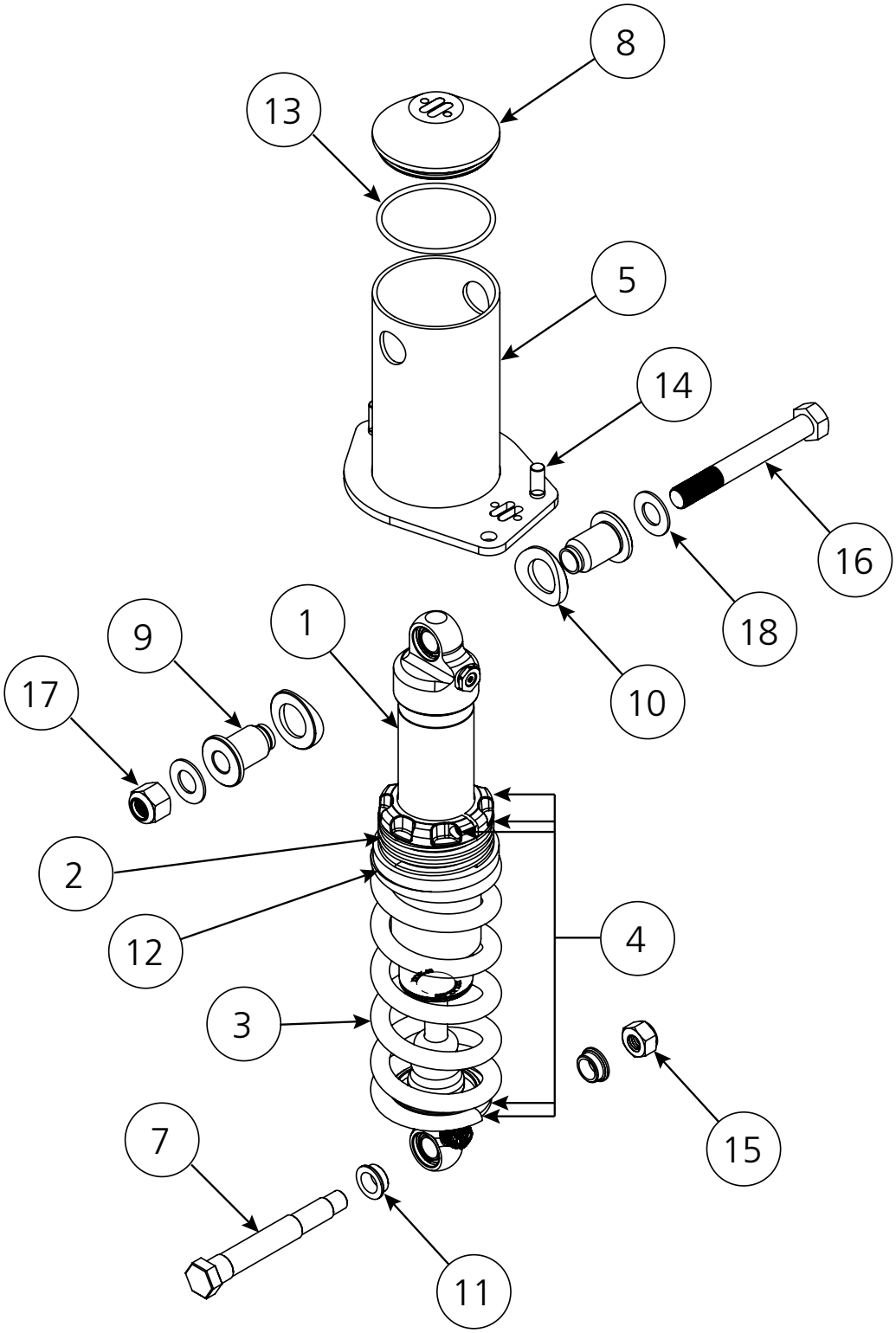

NOTE: The lower portion of the coil-over ships pre-assembled with initial preload set.

Disassembly

NOTE: Steps 1-3 require access to the trunk. To allow easier access, you may wish to refrain from raising the vehicle until step 4.

1. Remove the four plastic panels from the perimeter of the trunk as shown in Figures 1 and 2.

2. From the driver side of the trunk, remove the metal panel shown in Figure 3.

3. From inside the trunk, remove the two nuts/washers on the coil-over mounting bolts. (Driver Side Shown In Figure 4).

4. Raise the vehicle to a safe and comfortable working height if you have not already done so.

Figure 1

Figure 2

Figure 4

Figure 3

Disassembly

5. From the wheel well, remove the remaining mounting bolt at the top of the existing coil-over (Figure 5).

Figure 5

6. Disconnect the sway bar end link from the lower control arm (Figure 6).

Figure 6

7. Remove the lower mounting bolt from the existing coil-over, then slide the shock off of the mounting stud (Figure 7).

A prybar is helpful here if the rubber bushing proves to be stubborn.

Figure 7

8. Remove the existing coil-over from the vehicle (Figure 8).

Figure 8

9. Use a hammer to knock out the existing lower shock mount stud as shown in Figures 9 & 10.

NOTE: The brake rotor dust shield may have to be removed or slightly bent out of the way to remove the shock stud.

Figure 9

Figure 10

10. Insert the new lower shock mount stud (Figure 11).

NOTE: The brake rotor dust shield may have to be removed or slightly bent out of the way to install the new shock stud.

Figure 11

11. Use a hammer to fully seat the new stud in the spindle (Figure 12).

Figure 12

12. Insert the rear upper shock mount into the OEM shock location (Figure 13). The Ridetech logo on the bottom plate should be oriented to the rear.

Do not insert the studs in the holes and push the mount all the way up just yet. It will need to be rotated slightly to install the shock spacer in step 13.

Figure 13

Upper Shock Mount

NOTE: The shock spacers are installed in the upper mount from inside the trunk space. A second set of hands may be helpful here since the mount cannot be bolted into place until the outboard spacer is installed.

13. Slide a contoured washer onto a rear upper shock spacer (Figure 14).

Figure 14

14. To install the shock spacer and contoured washer in the outboard hole of the upper mount, rotate the mount about 90 degrees counterclockwise to gain access to the hole (Figure 15).

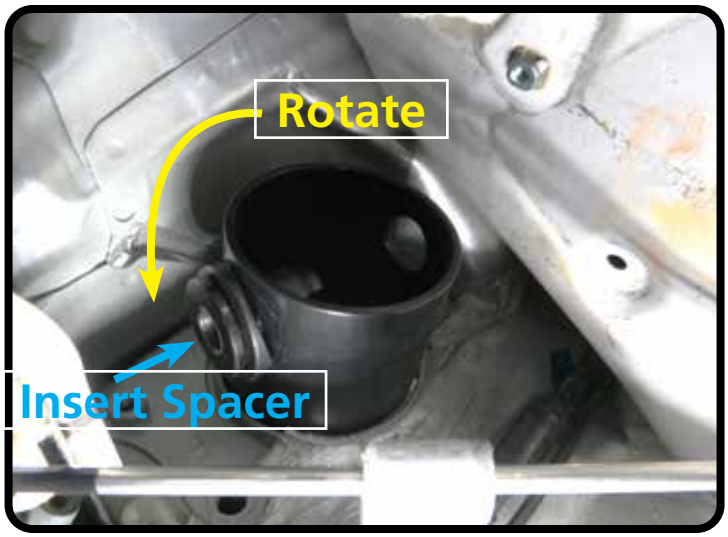

Figure 15

15. Once the spacer with contoured washer is installed, rotate the mount clockwise so the spacer is facing the driver side of the body as shown in Figure 16.

16. Align the two preinstalled studs in the bottom plate of the new shock mount with the original mounting holes in the body, and pull/push the mount up so the studs protrude into the trunk space (Figure 16).

Figure 16

Upper Shock Mount

17. Install the original washer and nut on each of the two studs (Figure 17).

Torque to **24-34 ft-lbs**.

Figure 17

18. Insert the original mounting bolt from the bottom side of the upper shock mount as shown in Figure 18.

Torque to **22-27 ft-lbs**.

Figure 18

19. Insert the bottom of the Ridetech pre-assembled coil-over through the upper shock mount (Figure 19).

The eyelet with adjustment knob should be facing down.

Figure 19

20. Insert the spacer that is already installed in the upper shock mount into the bearing in the shock body. Then insert the second spacer, with contoured washer, through the inboard hole of the shock mount and into the shock bearing (Figure 20).

Figure 20

21. Insert a 5/8"-18 x 4.5" bolt with washer through the spacer/mount/shock bearing and secure with a 5/8" washer and thin locknut (Figure 21).

NOTE: Do not torque the coil-over bolt until the cap is installed in step 22.

Figure 21

22. Install the aluminum cap on the upper mount. The cap simply presses on (Figure 22).
NOTE: Ensure the o-ring is installed and properly seated in the groove on the bottom of the cap.

Torque the upper coil-over bolt to **45 ft-lbs**.

Figure 22

23. Slide a 90002042 shock spacer onto the lower shock mount stud. The larger face of the spacer should seat against the spindle. Then slide the eyelet of the coil-over onto the mounting stud (Figure 23).

24. Slide another 90002042 shock spacer onto the lower shock mount stud with the small side of the spacer inserted into the eyelet bearing (Figure 24).

25. Thread an M14 Nylok nut onto the shock mount stud and torque to **75 ft-lbs**.

26. Reattach the rear sway bar end link (Figure 26). Torque to **27-40 ft-lbs**.

27. Repeat steps 3-26 on the opposite side.

28. Reinstall the trunk panels.

29. Proceed to the Ride Height, and Shock Tuning guides on the following pages.

Figure 23

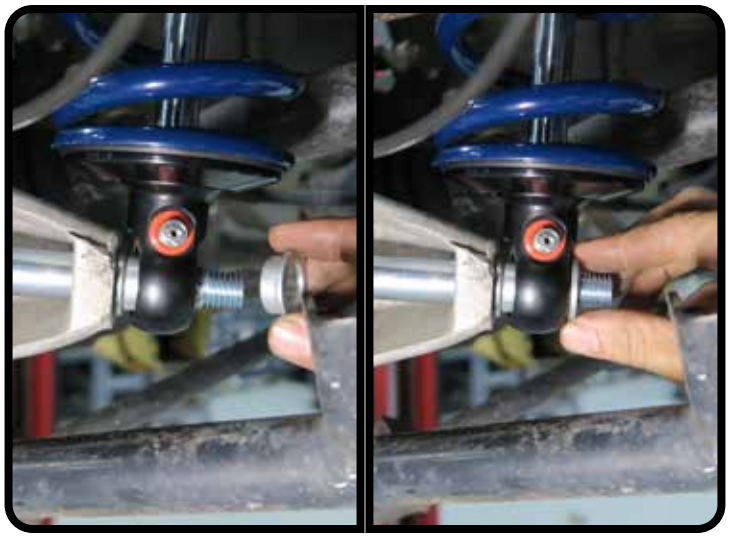

Figure 24

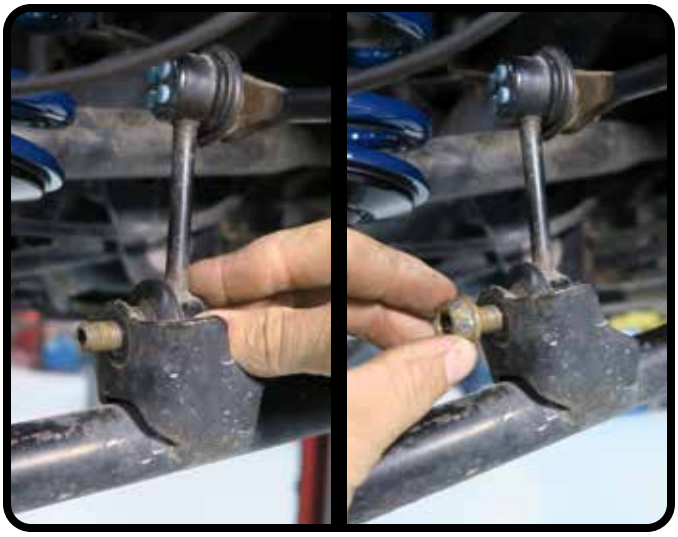

Figure 26

Figure 25

ADJUSTING RIDE HEIGHT

NOTE: Optimal ride quality and handling typically occurs when the shock absorber is sitting between 40-60% of its full travel at ride height. However, measuring the shock can be difficult on some applications. If you do not wish to measure your shocks, an easier method that is still quite effective is to measure wheel travel. See Steps 1-4 below for this alternate method. If you've determined that your shock travel is good, you may skip to Step 5 to jump straight to making any necessary ride-height adjustments.

1. With coilovers installed and the preload set, lower the vehicle to the ground. With the entire weight of the vehicle on the wheels, jounce the suspension and roll the vehicle forward and backward to release any suspension bind.

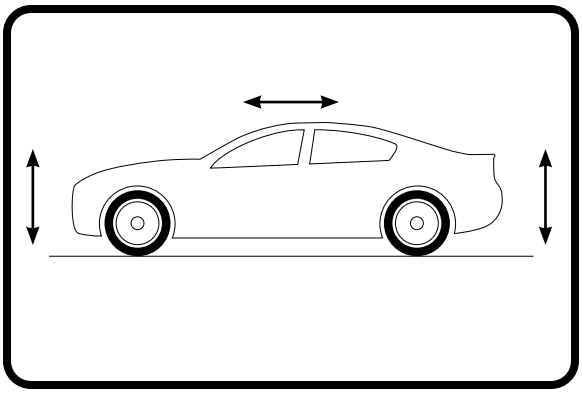

Figure 1

2. At the centerline of the wheel, take a measurement from the fender lip to the ground (Figure 2).

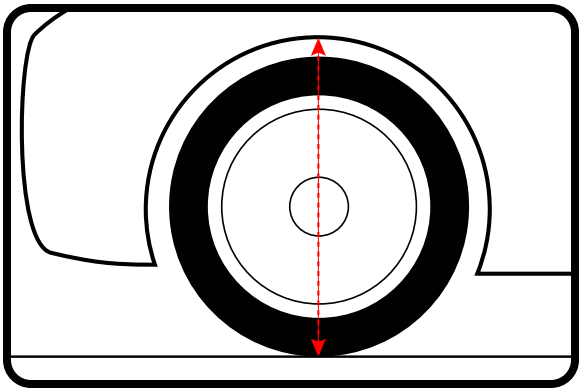

Figure 2

3. Lift the vehicle by the frame until the wheel is barely touching the ground. Take another measurement from the fender lip to the ground (Figure 3).

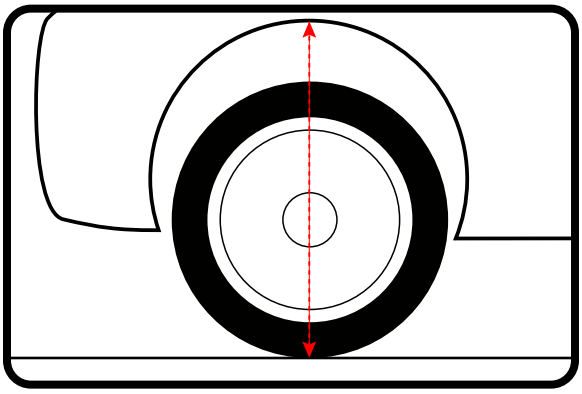

Figure 3

4. The difference between the measurements taken in Steps 2 and 3 is your **extension travel** at the wheel. A minimum of 1.5" of extension travel (at the wheel) is typically needed to prevent the shock from topping out. If you have more than 3" of extension travel, you may be at risk of bottoming out the shock and need to increase the ride height.

ADJUSTING RIDE HEIGHT

5. With coilovers installed and the preload set, lower the vehicle to the ground. With the entire weight of the vehicle on the wheels, jounce the suspension and roll the vehicle forward and backward to release any suspension bind. Evaluate your ride height.

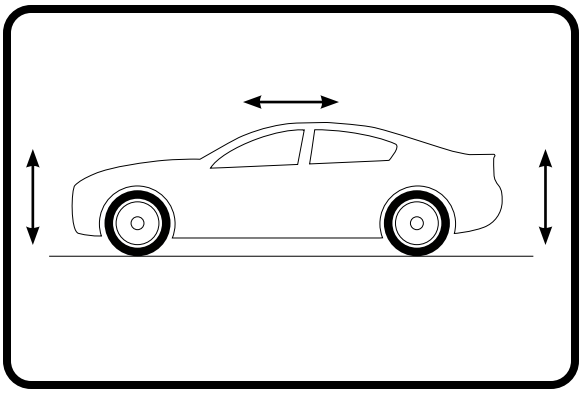

Figure 4

6. If you determine you need to adjust the ride height, raise the vehicle by the frame and allow the suspension to hang freely.

7. Loosen the locking screw on the coilover adjustment nut just enough to be able to turn the nut. **Do not remove the locking screw.** (Figure 5).

Figure 5

8. Measure the distance from the bottom of the adjustment nut to the flat of the shock body. We recommend recording this measurement for reference (Figure 6).

Figure 6

9. Using a spanner wrench, thread the nut up or down the shock body to achieve the desired ride height (Figure 7). Tighten the locking screw to secure the adjustment nut in place. Torque to **18 in-lbs**.

10. Lower the vehicle to the ground, jounce the suspension and roll the vehicle forward and backward to release any suspension bind.

11. Recheck your ride height. If you need to adjust, repeat Steps 6-10.

12. Once your desired ride height has been achieved, refer to the Shock Tuning Guide to dial in your shocks.

Figure 7

TUNING GUIDE
SINGLE-ADJUSTABLE SHOCKS

The Basics...

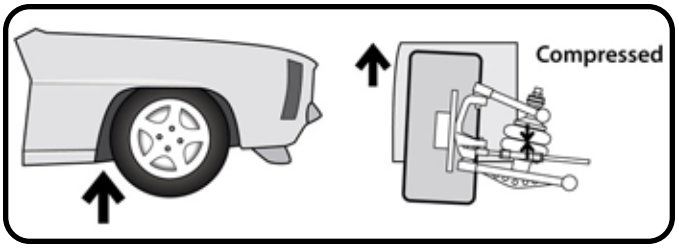

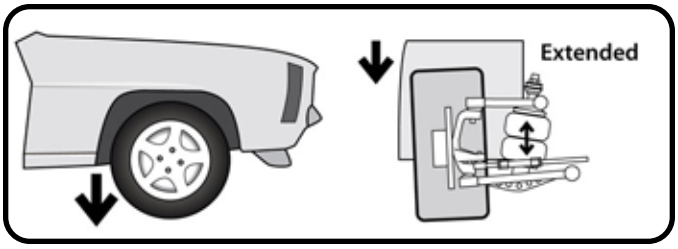

COMPRESSION

This typically occurs when you hit a bump in the road. The bump forces the wheel/tire/suspension assembly to "compress" or move upwards into the car.

REBOUND

Rebound is the opposite of compression. This occurs when the wheel/tire/suspension assembly falls into a pothole, or simply "rebounds" from being compressed.

Where Are The Knobs?

HQ Series Shocks

- **The adjustment knob is located on the top of the shock, either protruding from the side of the eyelet, or atop the stud.**
- **This knob provides rebound adjustment only.**

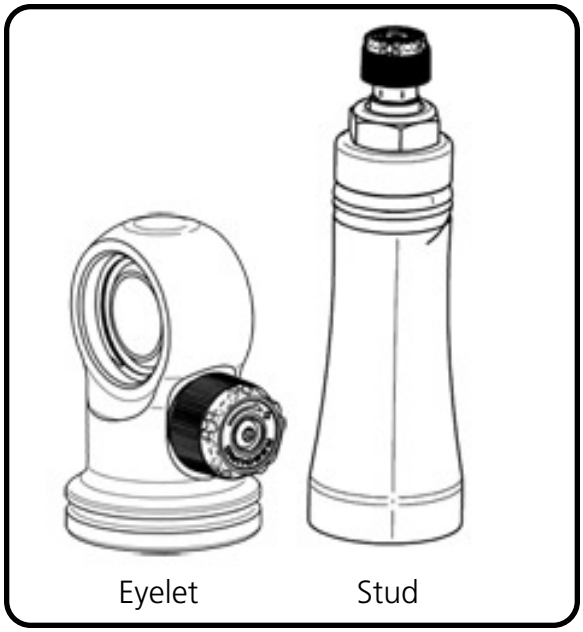

Knob Function

Counterclockwise = Softer

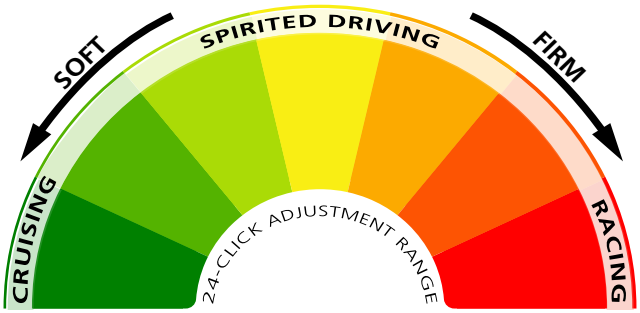

Clockwise = Firmer

TUNING GUIDE
SINGLE-ADJUSTABLE SHOCKS

Initial Rebound Setting

NOTE: Before jumping straight to a middle-of-the-road shock setting, we recommend you experience the full range of adjustment potential of your new shocks by first driving your vehicle at both the "full stiff" and "full soft" settings. Understanding how your shocks behave at these extremes will provide recognizable reference points as you attempt to dial in your settings.

1. Begin by setting your shocks to the "full stiff", or minimal rebound position. You do this by turning the adjustment knob clockwise until it stops.

2. Now turn the adjustment knob counterclockwise 12 clicks. This is the approximate center of the adjustment range.

3. Take the vehicle for a test drive. Try to determine if you are experiencing any of the unwanted behaviors found at the extremes of the adjustment range. If you are satisfied with the ride quality and handling, you're all set. Enjoy the ride!

4. If the vehicle feels too "floaty" or soft, turn the knob a few clicks clockwise to increase the damping effect.

If the ride quality is still too harsh or stiff, turn the knob a few more clicks counterclockwise to decrease the damping effect.

5. Take the vehicle for another test drive. If necessary, repeat the steps above until your desired optimal ride quality has been achieved.

General Guidelines

- The rear shocks typically have the most influence on ride quality. This is due to your seating position being closer to the rear than the front.
- Adjustments to the front shocks will generally require 3-4 clicks in any direction to be noticeable, while adjustments to the rear shocks may only require 1-2 clicks to be felt.
- Don't be afraid to turn the knobs and experience the full adjustment range. You are not going to hurt anything and you can always go back if you adjust too far one way or the other.