INSTALLATION GUIDE

PART NUMBER: LK90001
SKID PLATES
MERCEDES SPRINTER 4WD (VS30) | 2019+

300 W. PONTIAC WAY. CLOVIS, CA 93612
PHONE: 800-445-3767 | EMAIL: INFO@BELLTECH.COM

THANK YOU

Thank you for choosing our high quality Belltech product. We have spent a great deal of time developing our line of products so that you will receive maximum performance with minimal difficulty during installation. Soon your vehicle will be on the road looking and feeling much improved.

Please take a moment to read all instructions and warnings prior to installation of your new Belltech product and before operating your vehicle. If you have any questions or concerns regarding any step in the installation process, please do not hesitate to call or email our customer support specialists who are trained to help you through any portion of this process.

Before You Begin:

It is of the utmost importance that you confirm all of the components listed on the parts list is in the kit. You can find this list located on the last page(s) of your instructions. Do not begin installation if any part is missing. Instead, please call our Belltech customer service specialists.

Belltech Customer Support:

Phone: 1-800-445-3767

Email: info@belltech.com

Safety Information:

Warning: Do not work under a vehicle supported only by a jack. Place support stands securely under the vehicle in the manufacturer's specified locations unless otherwise instructed.

Proper use of safety equipment and eye/face/hand protection is absolutely necessary when performing any of the following instructions.

We strive for an exceptional experience for all our valued customers. If for any reason you need assistance with your Belltech products, please do not return the product to the store you purchased from, but rather call our dedicated customer service experts, from 7am to 5pm PST.

We recommend that a qualified mechanic, at a properly equipped facility, perform this installation.

It is very helpful to have an assistant available during installation.

Before Driving Your Vehicle:

It is important to double check all brake hoses, cables, and other components to be sure there is no interference. You must also check for wheel/tire to chassis/body interference. If any issues are found, review your installation instructions to be sure no steps were missed and any problems are corrected.

Make sure your vehicle is aligned immediately following installation.

Check all hardware and re-torque at intervals for the first 10, 100, and 1000 miles.

Some of Belltech's products are designed to improve your vehicle's off-road performance. Leveling/lifting your vehicle may result in an altered center of gravity. It is crucial to use extreme care when operating your vehicle to prevent rollover and/or loss of control.

Any changes in your vehicle's suspension may result in transformed handleability. Please test-drive your vehicle in a remote location so you can become accustomed to the revised driving characteristics.

Perform headlight check and adjustment.

Failure to drive any modified vehicle in a safe manner may result in harm or death.

Never operate your modified vehicle under the influence of drugs, alcohol, or lack of adequate sleep.

Always wear your seatbelt.

DIFFICULTY: **INSTALLATION TIME:** 1 Hour

RECOMMENDED TOOLS:

- Properly rated floor jack
- Ratcheting socket wrench and socket set
- Metric wrench set
- Hex key wrench set
- Support stands
- Wheel chocks
- Safety glasses

JACKING, SUPPORTING, AND PREPARING THE VEHICLE

1. Park your vehicle on a smooth, level, concrete or seasoned asphalt surface.
2. Block the rear wheels of the vehicle using wheel chocks. Make sure the vehicle's transmission is in "PARK" (automatic) or 1st gear (manual).
3. Activate the parking brake.
4. Lift the front of the vehicle off the ground using a properly rated floor jack. Lift the vehicle so the front tires are approximately 6-8 inches off the ground.
5. Place support stands rated for the vehicles weight. The stands should be positioned in the factory specified locations. (Refer to the owners manual). Prior to lowering the vehicle onto stands, make sure the support stands will contact the chassis. It is very important that the vehicle is properly supported to prevent any harm to ones self or to the vehicle.
6. Lower the vehicle slowly onto the stands.

Technician reminder:

Never work under a vehicle supported only by a jack. It is necessary to place support stands securely under the vehicle in the manufacturer's specified locations unless otherwise instructed.

BELLTECH SKID PLATE INSTALLATION

7. If equipped with factory skid plates, remove the front and rear skid plates.

8. Remove the four bolts from cross member behind the front bumper. Detach the cross member from the vehicle.

9. Begin installation with the lower Belltech skid plate. Support the skid plate with a floor jack and secure the rear mounting points using the original skid plate bolts, leaving them loose at this time.

Technician reminder:

The front end of the lower skid plate will be installed between the front skid plate and frame.

BELLTECH SKID PLATE INSTALLATION CONTINUED

10. Mount the Belltech upper skid plate to the cross member mount behind the front bumper using the four supplied M8 x1.25-25 mm flanged hex head bolts. Fasten but do nto torque yet.

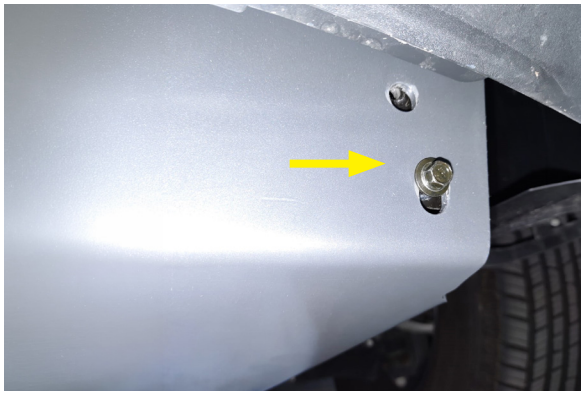

11. Attach the rear end of the front skid plate below the front end of the lower skid plate. Fasten onto the chassis and skid plates with the supplied M8 x 1.25-50 mm button head screws and M8 washers.

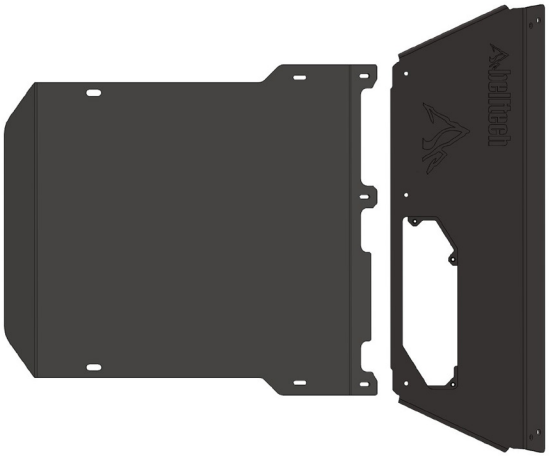

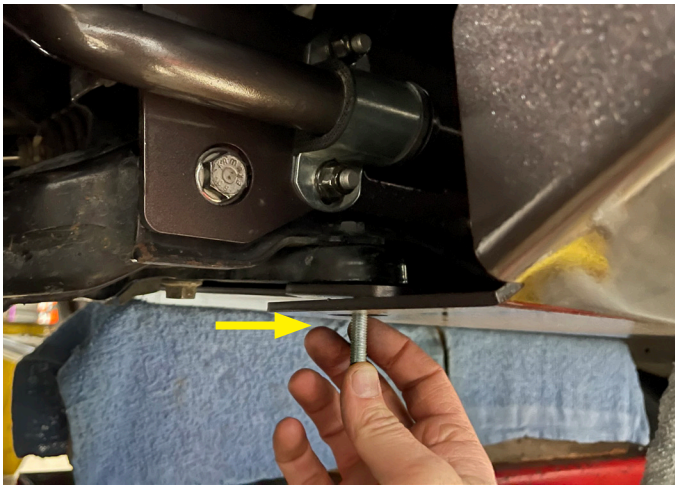

12. Attach the oil drain door to the upper skid plate with the three supplied M8 x 1.25-25 mm button head screws.

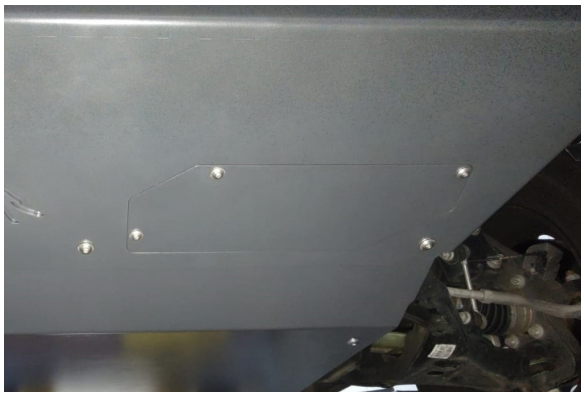

13. Once all bolts are installed, torque the rear OEM skid plate bolts to the factory specification. Torque the supplied bolts to 20 ft lbs.

FINALIZING THE INSTALLATION

14. Lift the vehicle and remove the support stands.
15. Carefully lower the vehicle onto the flat ground.
16. Check that all components and fasteners have been properly installed and torqued.
17. Read and perform all tasks in the “Before Driving Your Vehicle” section of page 1 of your instructions.

THANK YOU FOR CHOOSING BELLTECH.

You are now a part of the Belltech family and we are eager to catch a glimpse of your newly modified vehicle. Give us a shout out and let us know how much you love our product. Don’t forget, we offer other Belltech related merchandise for you and your vehicle on our website www.belltech.com

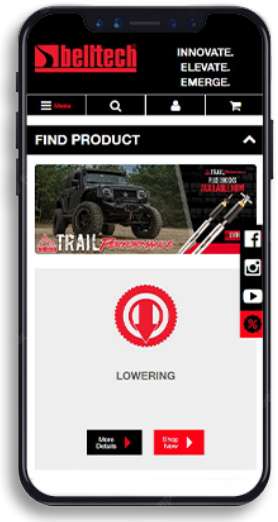

belltechsuspension

Belltech Suspension

@belltechsuspension

@belltechsuspension

If you have any questions, concerns, or warranty related issues regarding your Belltech product, please call or email our experienced customer service specialists.

Belltech Customer Support:

Phone: 1-800-445-3767

Email: info@belltech.com

KIT CONTENTS

LK90001		
Part number	Description	Qty
155251-108A-992	Front Upper Skid Plate	1
155251-108B-992	Front Lower Skid Plate	1
155251-108A-D-992	Oil Drain Cover	1
LK90001-777	Hardware Kit	1

LK90001-777 Hardware Kit		
Part number	Description	Qty
112301	M8 x 1.25 - 25mm Flanged Hex Bolt	4
110302	M8 x 1.25 - 50mm Button Head Screw	2
110304	M8 x 1.25 - 25mm Button Head Screw	3
110245	M8 Washer	2

KW automotive North America, Inc.
300 W. Pontiac Way
Clovis, CA 93612
Phone: +1-559-875-0222
Toll Free: 1-800-445-3767

belltech.com