ridetech

INSTALLATION INSTRUCTIONS

Part # 12296001

Rear HQ Series ShockWaves

2015-2026 Ford F-150

www.ridetech.com
812.482.2932

Please Read And Understand All Instructions And Warnings Prior To The Installation Of This Product.

Congratulations on your new Ridetech product! It's an honor that you've selected the Ridetech brand to upgrade your ride. Our products are developed around quality and performance without compromise. We're confident you'll have many years (and miles) of pure driving enjoyment.
Thank you for choosing Ridetech!

Road Map

Exploded View & Parts Listing 3

ShockWave Care Guide 4

Shock Tuning Guide 5-6

Shock Dimensions	
Measured From Center-To-Center Of Shock Bearings	
Compressed	**13.00"**
Ride Height	**16.00"**
Extended	**18.63"**

EXPLODED VIEW AND PARTS LISTING

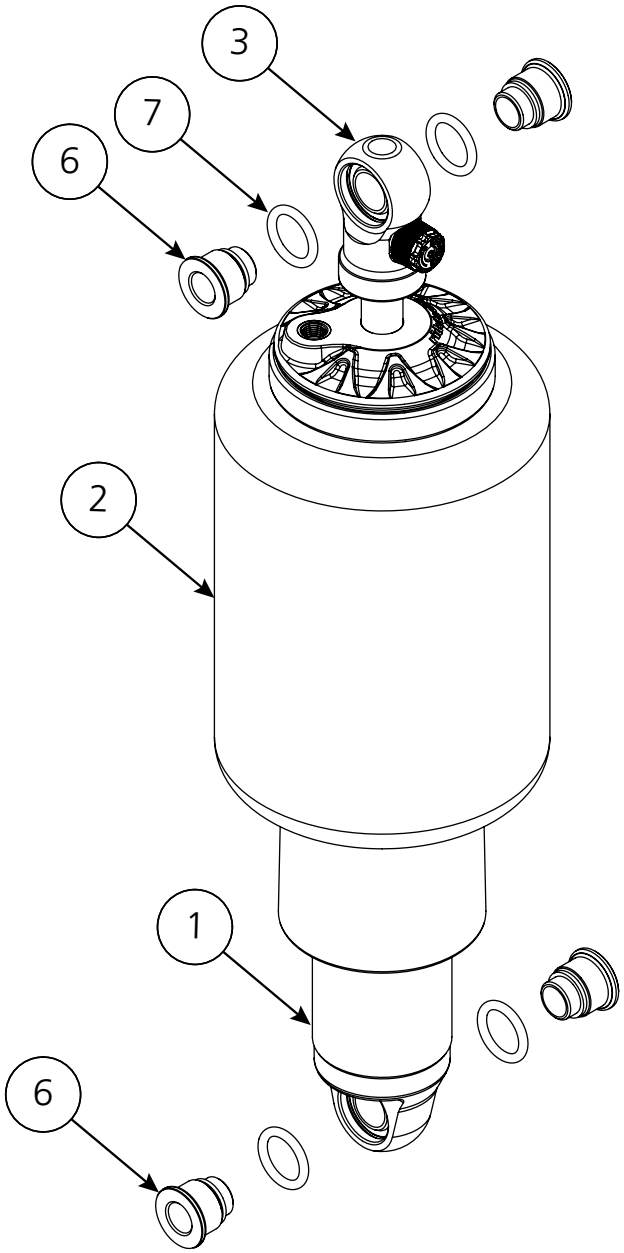

Item #	Part #	Description	Qty
1	982-10-806	6.3″ Stroke Single Adjustable Shock	2
2	24090899	8000 Series Air Spring	2
3	90004000	1.7″ Adjustable Shock Eyelet	2
4	90001994	Shock Bearing (installed in shock)	4
5	90001995	Bearing Snap Ring (installed in shock)	8
6	90003229	Shock Bearing Spacers	8
7	99007210	#210 O-Ring	8

SHOCK*WAVE* CARE GUIDE

PLEASE READ

The air spring locking ring IS NOT adjustable. This ring is set to a specific position at the factory to optimize the air spring stroke with the shock stroke. Attempting to adjust this ring will void your warranty.

DO NOT attempt to remove the press-in air fitting. It may result in damage to the composite cap and void your warranty.

DO NOT drive the vehicle with the air springs fully deflated. Severe damage to the internal bump stop, shock bushings, and shock mounts may occur.

- **Avoid driving the vehicle with the air springs overinflated or "topped out". Over time the shock valving may suffer severe damage or total failure. Our recommended ride-height range is between 40-60% of total suspension travel.**
- **Do not allow the air spring bellows to rub on or interfere with any surrounding objects. Ensure the Shockwaves are adequately distanced from the exhaust system. Damage or total failure may occur.**
- **Do not use harsh or abrasive chemicals or solvents to clean your Shockwaves. A mild soap and water solution is sufficient.**
- **When working around or near your shocks, avoid allowing over spray of harsh chemicals or solvents to make contact with your Shockwaves.**
- **When attempting to clock the air fitting, you may rotate the air spring assembly on the shock. Ensure the fitting does not contact the vehicle frame or other surrounding objects.**

TUNING GUIDE
SINGLE-ADJUSTABLE SHOCKS

The Basics...

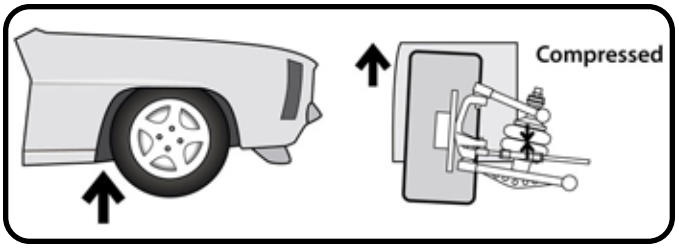

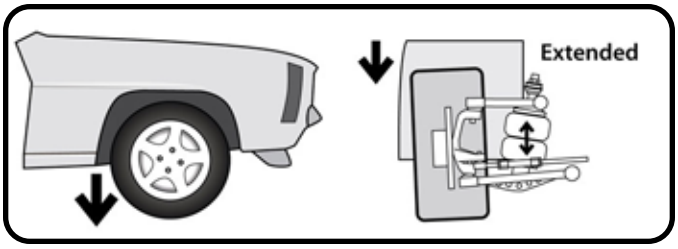

COMPRESSION

This typically occurs when you hit a bump in the road. The bump forces the wheel/tire/suspension assembly to "compress" or move upwards into the car.

REBOUND

Rebound is the opposite of compression. This occurs when the wheel/tire/suspension assembly falls into a pothole, or simply "rebounds" from being compressed.

Where Are The Knobs?

HQ Series Shocks

- **The adjustment knob is located on the top of the shock, either protruding from the side of the eyelet, or atop the stud.**
- **This knob provides rebound adjustment only.**

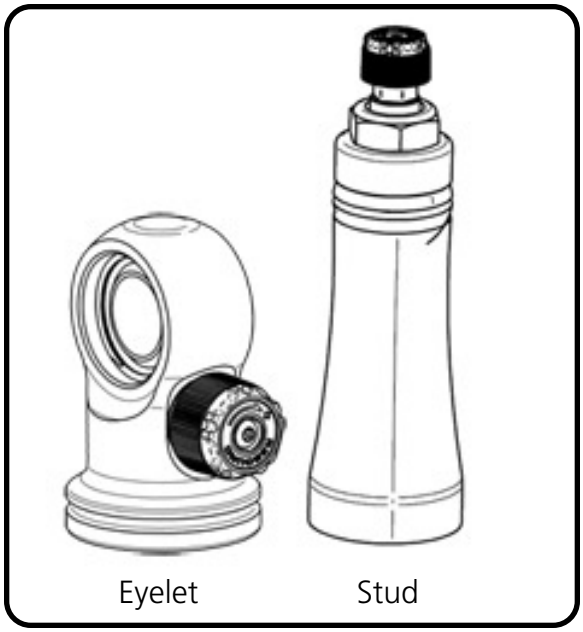

Knob Function

Counterclockwise = Softer

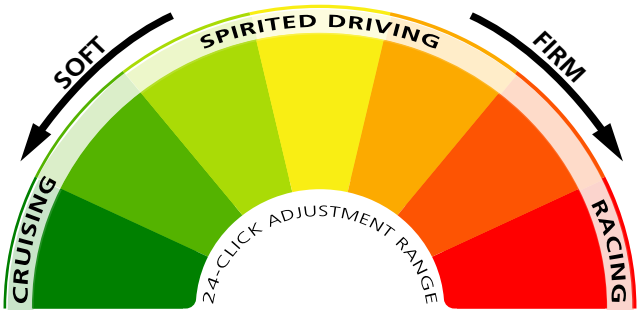

Clockwise = Firmer

TUNING GUIDE
SINGLE-ADJUSTABLE SHOCKS

Initial Rebound Setting

NOTE: Before jumping straight to a middle-of-the-road shock setting, we recommend you experience the full range of adjustment potential of your new shocks by first driving your vehicle at both the "full stiff" and "full soft" settings. Understanding how your shocks behave at these extremes will provide recognizable reference points as you attempt to dial in your settings.

1. Begin by setting your shocks to the "full stiff", or minimal rebound position. You do this by turning the adjustment knob clockwise until it stops.

2. Now turn the adjustment knob counterclockwise 12 clicks. This is the approximate center of the adjustment range.

3. Take the vehicle for a test drive. Try to determine if you are experiencing any of the unwanted behaviors found at the extremes of the adjustment range. If you are satisfied with the ride quality and handling, you're all set. Enjoy the ride!

4. If the vehicle feels too "floaty" or soft, turn the knob a few clicks clockwise to increase the damping effect.

If the ride quality is still too harsh or stiff, turn the knob a few more clicks counterclockwise to decrease the damping effect.

5. Take the vehicle for another test drive. If necessary, repeat the steps above until your desired optimal ride quality has been achieved.

General Guidelines

- The rear shocks typically have the most influence on ride quality. This is due to your seating position being closer to the rear than the front.
- Adjustments to the front shocks will generally require 3-4 clicks in any direction to be noticeable, while adjustments to the rear shocks may only require 1-2 clicks to be felt.
- Don't be afraid to turn the knobs and experience the full adjustment range. You are not going to hurt anything and you can always go back if you adjust too far one way or the other.