ridetech

INSTALLATION INSTRUCTIONS

Part # 12293210

Front HQ Touring Coil-Over

2015-2026 F-150 2WD/4WD

www.ridetech.com
812.482.2932

Please Read And Understand All Instructions And Warnings Prior To The Installation Of This Product.

Congratulations on your new Ridetech product! It's an honor that you've selected the Ridetech brand to upgrade your ride. Our products are developed around quality and performance without compromise. We're confident you'll have many years (and miles) of pure driving enjoyment.
Thank you for choosing Ridetech!

Road Map

Parts List and Exploded View	**3**
Coil-Over Installation	**4-6**
Shock Tuning Guide	**7-8**

Suggested Alignment Specs For Street Driving

Camber: 0 to -.75 Degrees

Caster: +5.5 to +7.5 Degrees

Toe: 1/16" - 1/8" Toe In

EXPLODED VIEWS AND PARTS LISTING

Item #	Part #	Description	Qty
1	986-10-124	5.23" Travel Threaded Shock	1
2	57150700	Coil Spring, 12"	1
3	234-00-828	Spring Retainer, Lower	1
4	234-15-200	Adjuster Nut	1
5	99050001	Adjuster Nut Screw	1
6	234-00-901	Spring Retainer, Upper	1
7	006-00-062	Logo Ring	1
8	019-04-000	Stud, M10 x 1.25	3
9	99562003	Nylok Jam Nut, 9/16"-18	1
10	210-35-120-0	Adjustment Knob	1
11	90009969	Adjustment Knob Screw	1
12	90003952	Top Hat Assembly	1
13	213-63-008	Bar Pin	1
Hardware Kit: 99010293			
14	99121016	M12-1.75 X 70 Flange Bolt	2
15	99112006	M10-1.25 Nylok Nut	3
16	99113002	M10 Flat Washer	3
-	85000000	Spanner Wrench	1
-	90002263	Red Threadlocker, 1ml	1

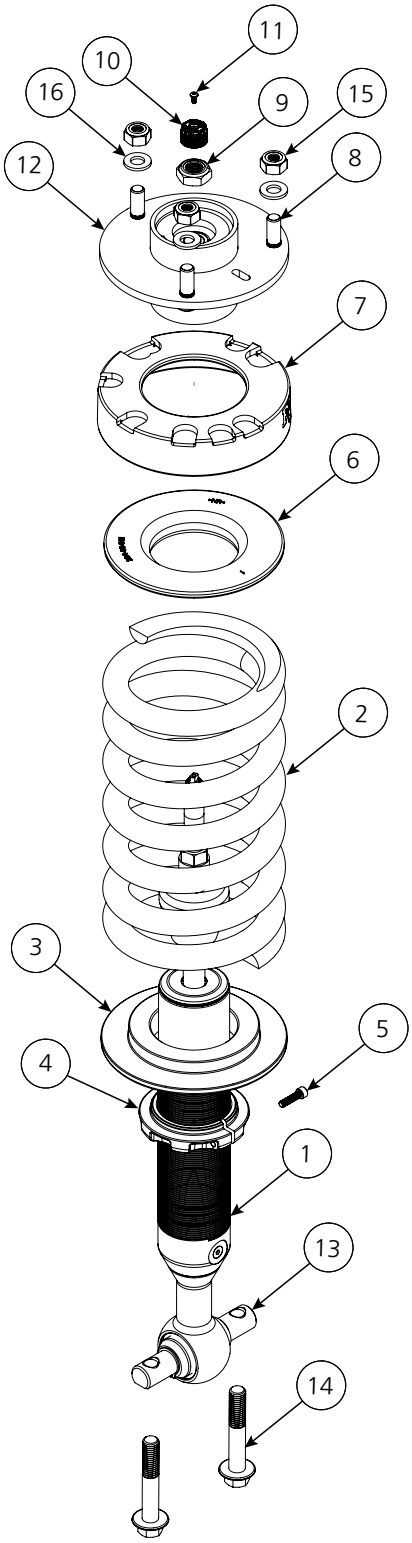

Coil-Over Installation

1. Raise the vehicle to a safe & comfortable working height.

2. Remove the existing front shock/spring assembly. Refer to the factory service manual for proper removal instructions.

DO NOT DISASSEMBLE THE SHOCK/SPRING ASSEMBLY. The coil spring is under compression and improper disassembly may result in serious injury.

3. Locate the slot on the top-hat assembly of the coil-over (circled in Figure 1).

This slot must be oriented parallel to the centerline of the vehicle when positioning the coil-over in the shock tower. The slot should be to the rear on the driver side, and to the front on the passenger side as shown in Figure 2.

You should be able to rotate the top hat assembly by hand to position the slot.

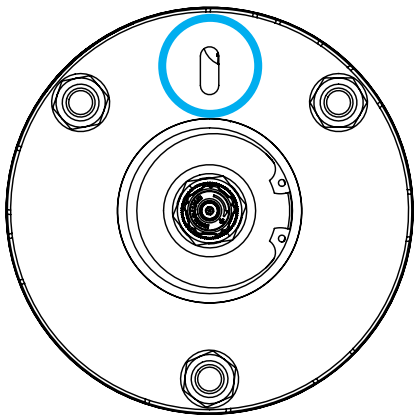

Figure 1

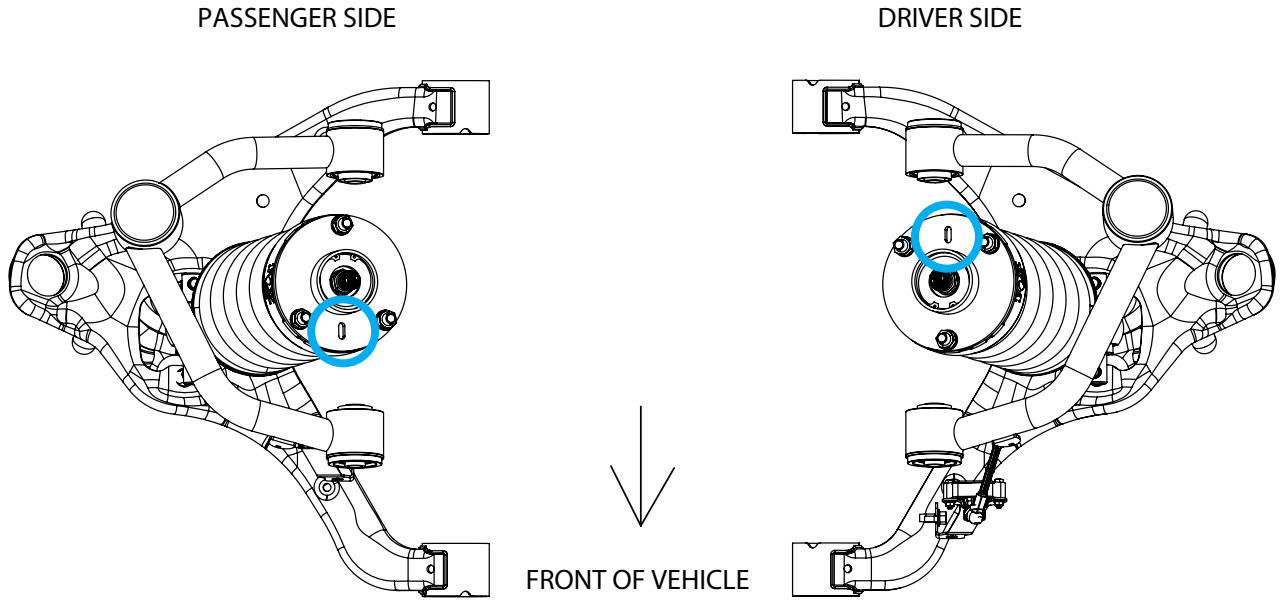

Figure 2

Coil-Over Installation

4. Position the new coil-over in the original mounting location (Figures 3 & 4), aligning the three studs on top of the coil-over assembly with the original mounting holes in the shock tower.

Again, ensure the slot in the top hat is oriented as illustrated on the previous page.

5. Install an M10 flat washer and Nylok nut on each of the three studs, but do not tighten yet (Figure 5).

6. Align the trunnion with the mounting holes in the lower control arm (Figure 6).

Figure 3

Figure 4

Figure 6

Figure 5

Coil-Over Installation

7. Apply red loctite to two M12-1.75 x 70mm flange bolts and insert into each of the two mounting holes.
Torque to **78 ft-lbs** (Figure 7).

8. Torque the three upper coil-over mounting nuts to **50 ft-lbs**.

9. Reattach the upper control arm to the spindle (Figure 8).

10. Install the ball joint nut and torque to **50 ft-lbs** (Figure 9). If necessary, **tighten** the nut to align the cotter pin holes. Install and bend the cotter pin.

11. Repeat on the opposite side.

12. Have the vehicle aligned (see the suggested alignment specs on page 2).

Figure 7

Figure 8

Figure 9

TUNING GUIDE
SINGLE-ADJUSTABLE SHOCKS

The Basics...

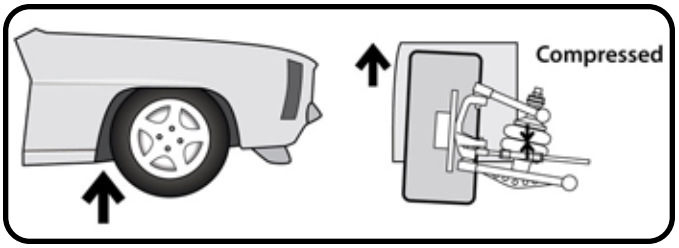

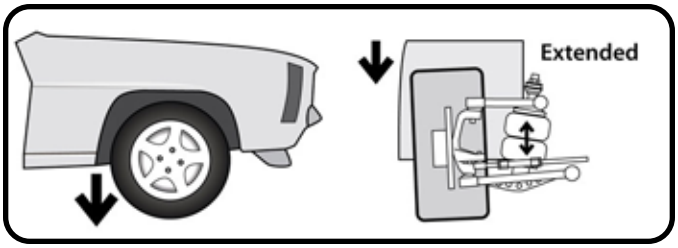

COMPRESSION

This typically occurs when you hit a bump in the road. The bump forces the wheel/tire/suspension assembly to "compress" or move upwards into the car.

REBOUND

Rebound is the opposite of compression. This occurs when the wheel/tire/suspension assembly falls into a pothole, or simply "rebounds" from being compressed.

Where Are The Knobs?

HQ Series Shocks

- **The adjustment knob is located on the top of the shock, either protruding from the side of the eyelet, or atop the stud.**
- **This knob provides rebound adjustment only.**

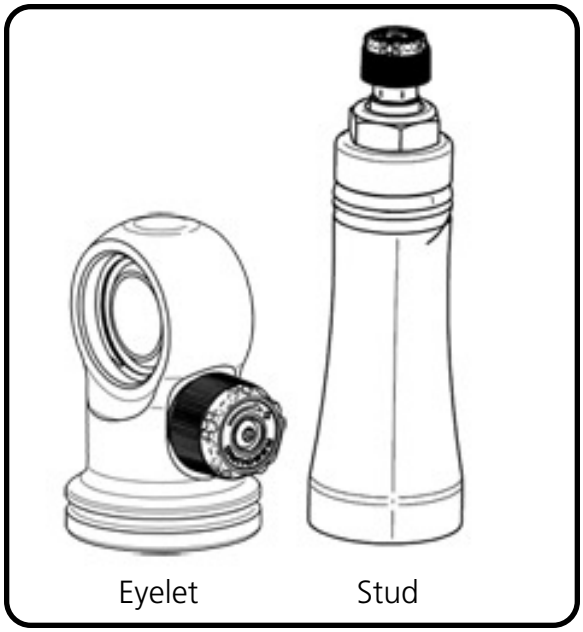

Knob Function

Counterclockwise = Softer

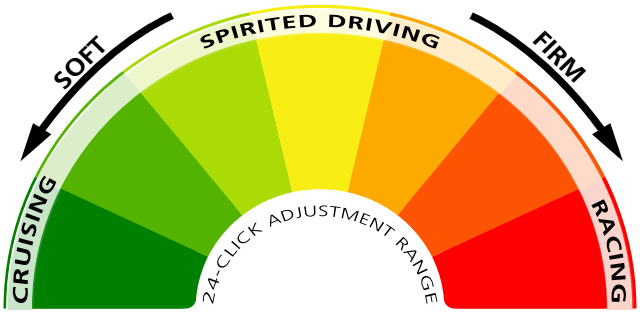

Clockwise = Firmer

TUNING GUIDE
SINGLE-ADJUSTABLE SHOCKS

Initial Rebound Setting

NOTE: Before jumping straight to a middle-of-the-road shock setting, we recommend you experience the full range of adjustment potential of your new shocks by first driving your vehicle at both the "full stiff" and "full soft" settings. Understanding how your shocks behave at these extremes will provide recognizable reference points as you attempt to dial in your settings.

1. Begin by setting your shocks to the "full stiff", or minimal rebound position. You do this by turning the adjustment knob clockwise until it stops.

2. Now turn the adjustment knob counterclockwise 12 clicks. This is the approximate center of the adjustment range.

3. Take the vehicle for a test drive. Try to determine if you are experiencing any of the unwanted behaviors found at the extremes of the adjustment range. If you are satisfied with the ride quality and handling, you're all set. Enjoy the ride!

4. If the vehicle feels too "floaty" or soft, turn the knob a few clicks clockwise to increase the damping effect.

If the ride quality is still too harsh or stiff, turn the knob a few more clicks counterclockwise to decrease the damping effect.

5. Take the vehicle for another test drive. If necessary, repeat the steps above until your desired optimal ride quality has been achieved.

General Guidelines

- The rear shocks typically have the most influence on ride quality. This is due to your seating position being closer to the rear than the front.
- Adjustments to the front shocks will generally require 3-4 clicks in any direction to be noticeable, while adjustments to the rear shocks may only require 1-2 clicks to be felt.
- Don't be afraid to turn the knobs and experience the full adjustment range. You are not going to hurt anything and you can always go back if you adjust too far one way or the other.