ridetech

Installation Instructions

Part # 11336511 - 1963-1972 C10 Rear CoilOvers

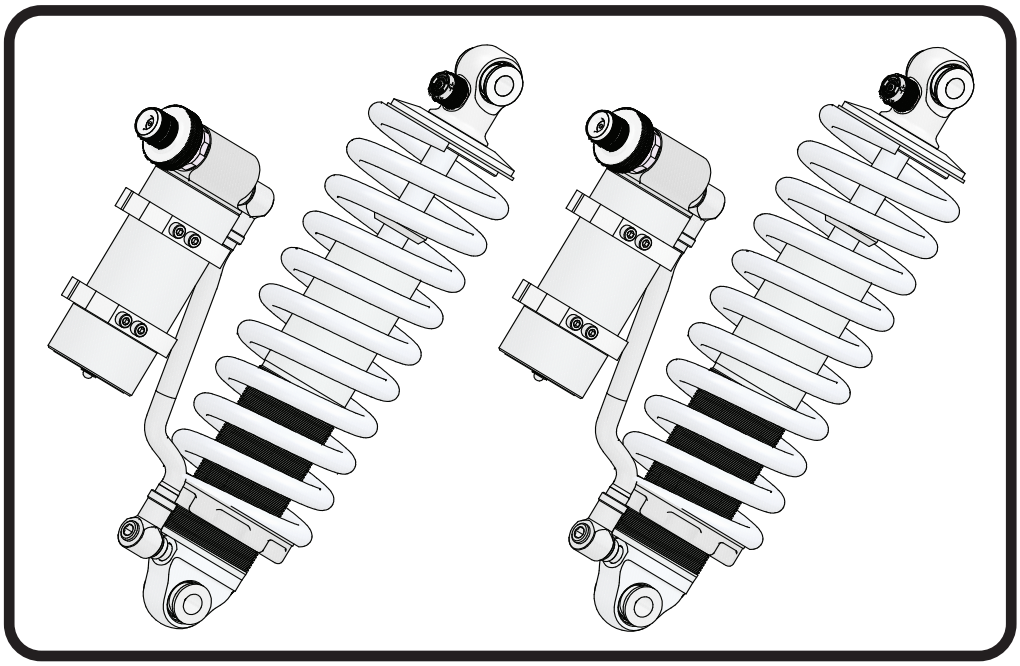

Recommended Tools

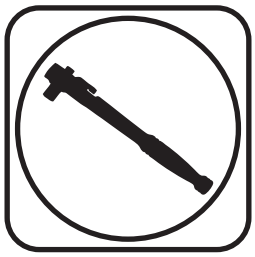

1963-1972 C-10 TQ Series Rear Coilovers

Installation Instructions

Table of contents

Page 2..... Included components
Page 3..... Assembly and Adjusting
Page 4..... Shock Adjustment
Page 5..... Shock Adjustment and Setting Height

ShockWave Dimensions:

Center of bearing to Center of bearing:

Compressed:	11.23”
Ride Height:	14.50”
Extended:	16.43”

www.ridetech.com

812-482-2932

Major Components .....In the box

Item #	Part #	Description	QTY
1	986-10-072	5.2" Stroke TQ Series Shock	2
2	815-05-022	Shock Eyelet	2
3	803-00-199(kit)	Upper Coilspring Mount	2
4	59100275	Coilspring 10" 275lb	2
5	70010828	Delrin Spring Washer	4
6	803-00-199(kit)	Lower Spring Adjuster Nut (803-00-199 kit)	2
	803-00-199(kit)	Adjuster Nut Locking Screw (803-00-199 kit)	2
	803-00-199(kit)	Retaining Ring (803-00-199 kit)	2
9	026-05-000	Reservoir Clamps	4
10	99050000	Reservoir Socket Head Cap Screws	12
11	90001994	5/8" ID Bearing (installed in shock and eyelet)	4
12	90001995	Bearing Snap Ring (installed in shock and eyelet)	8

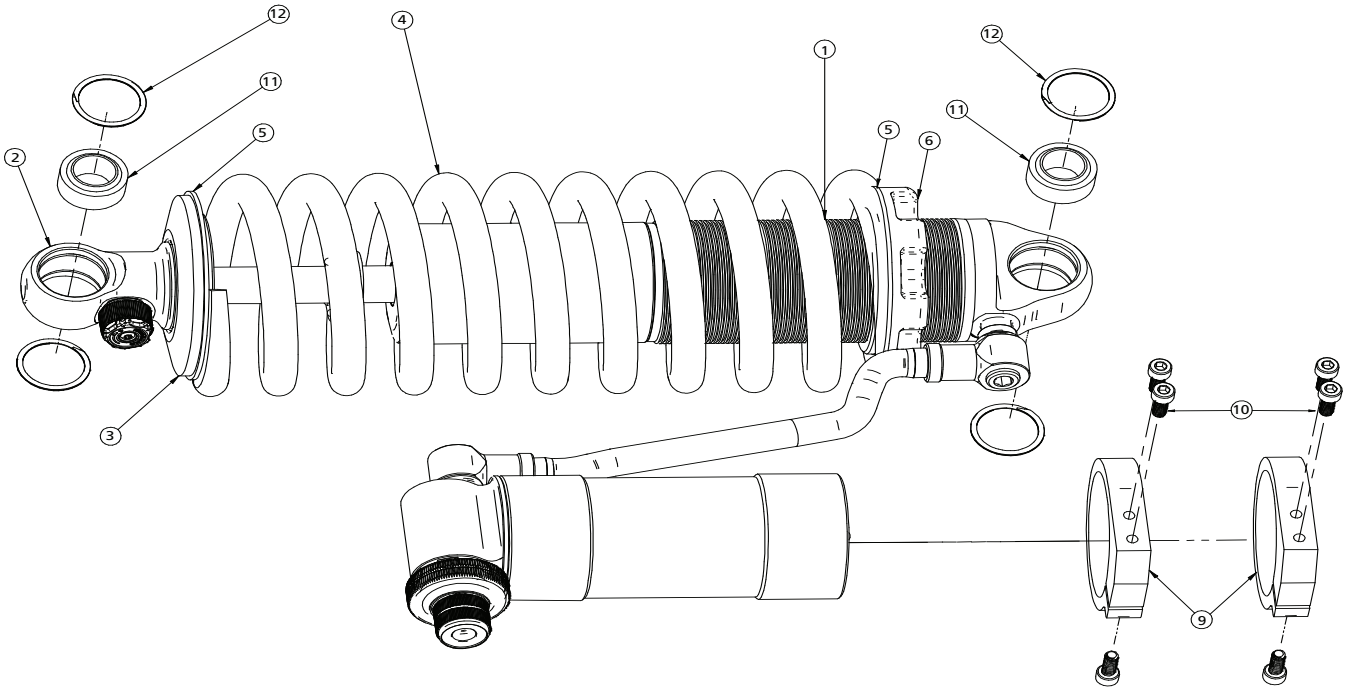

CoilOver Assembly...

First, using the supplied lower adjuster nut (803-00-199) thread the nut onto the shock from the bottom side as seen in figure 1. Remove the plastic pellet that is in the split of the adjuster nut.

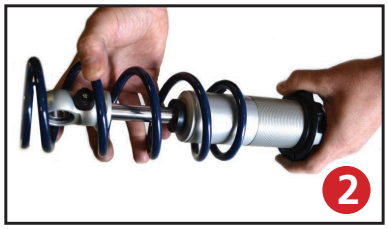

Next, install a delrin washer then coil spring over the top of the shock as seen in figure 2.

Before the upper spring mount can be installed screw the adjuster knob on the upper eye mount to the firmest setting (clockwise) as seen in figure 3. Then remove the Knob by holding it while removing the center screw.

Once the knob is removed slide a Delrin washer over the eyelet. Next, slide the upper spring mount (803-00-199) over eyelet as seen in figure 4.

Install upper spring mount retainer clip (803-00-199) into the groove on the upper eyelet as seen in figure 5. Then, reinstall adjuster to complete assembly.

Install the locking screw in the adjuster nut before setting spring preload, but DO NOT tighten until the spring preload has been set.

NOTE: Remember to adjust the shock valving before driving, the shock is currently set to full stiff.

Shock Adjustment 101- Single Adjustable

Rebound Adjustment:
How to adjust your new shocks.
The rebound adjustment knob is located on the top of the shock absorber protruding from the eyelet.
You must first begin at the ZERO setting, then set the shock to a medium setting of 12.

-Begin with the shocks adjusted to the ZERO rebound position (full stiff). Do this by rotating the rebound adjuster knob clockwise until it stops.

-Now turn the rebound adjuster knob counter clock wise 12 clicks. This sets the shock at 12. (settings 21-24 are typically too soft for street use).

Take the vehicle for a test drive.

-if you are satisfied with the ride quality, do not do anything, you are set!

-if the ride quality is too soft increase the damping effect by rotating the rebound knob clock wise 3 clicks.

Take the vehicle for another test drive.

-if the vehicle is too soft increase the damping effect by rotating the rebound knob clock wise 3 additional clicks.

-If the vehicle is too stiff rotate the rebound adjustment knob counter clock wise 2 clicks and you are set!

Take the vehicle for another test drive and repeat the above steps until the ride quality is satisfactory.

Note:
One end of the vehicle will likely reach the desired setting before the other end. If this happens stop adjusting the satisfied end and keep adjusting the unsatisfied end until the overall ride quality is satisfactory.

Shock Adjustment

Shock Adjustment 101-**Triple Adjustable**

Triple Adjustable:
Step One: High Speed Compression

-High speed compression adjustments are used in both street driving and track tuning.

-Begin with the shocks adjusted to the ZERO high speed compression position (full stiff). Do this by rotating the high speed compression adjuster (large knob) clockwise until it stops.

-Now turn the high speed compression adjuster knob counter clock wise 20 clicks. This sets the shock at 20. (settings 21-24 are typically too soft for street use. For typical street driving the high speed compression adjuster will remain at setting 20.

Step Two: Low Speed Compression
Low speed compression adjustment is what is typically felt during street driving.

-Begin with the shocks adjusted to the ZERO low speed compression position (full stiff). Do this by rotating the low speed compression adjuster (small knob) clockwise until it stops.
-Now turn the low speed compression adjuster knob counter clock wise 20 clicks. This sets the shock at 20. (settings 21-24 are typically too soft for street use).
Take the vehicle for a test drive.

-if you are satisfied with the ride quality, do not do anything, you are set!

-if the ride quality is too soft increase the damping effect by rotating the low speed compression knob clock wise 3 clicks.

Take the vehicle for another test drive.

-if the vehicle is too soft increase the damping effect by rotating the low speed compression knob clock wise 3 additional clicks.

-If the vehicle is too stiff rotate the low speed compression adjustment knob counter clock wise 2 clicks and you are set!

Take the vehicle for another test drive and repeat the above steps until the ride quality is satisfactory.

Step 3:
Adjust rebound according to Single Adjustable instructions.

Note:
One end of the vehicle will likely reach the desired setting before the other end. If this happens stop adjusting the satisfied end and keep adjusting the unsatisfied end until the overall ride quality is satisfactory.

Final Tightening and Adjusting

Ride Height

We have designed most cars to have a ride height of about 2" lower than factory. To achieve the best ride quality & handling, the shock absorber needs to be at 40-60% overall travel when the car is at ride height. This will ensure that the shock will not bottom out or top out over even the largest bumps. Measuring the shock can be difficult, especially on some front suspensions. Measuring overall wheel travel is just as effective and can be much easier. Most cars will have 4-6" of overall wheel travel. One easy way to determine where you are at in wheel travel is to take a measurement from the fender lip (center of the wheel) to the ground. Then lift the car by the frame until the wheel is just touching the ground, re-measure. This will indicate how far you are from full extension of the shock. A minimum of 1.5" of extension travel (at the wheel) is needed to ensure that the shock does not top out. If you are more than 3" from full extension of the shock then you are in danger of bottoming out the shock absorber.

Adjusting Spring Height

When assembling the CoilOver, screw the spring retainer tight up to the spring (0 preload). After entire weight of car is on the wheels, jounce the suspension and roll the car forward and backward to alleviate suspension bind.

- If the car is too high w/ 0 preload then a smaller rate spring is required. Although threading the spring retainer down would lower the car, this could allow the spring to fall out of its seat when lifting the car by the frame.

- If the car is too low w/ 0 preload, then preload can then be added by threading the spring retainer up to achieve ride height. On 2.6" - 4" stroke shocks, up to 1.5" of preload is acceptable. On 5-7" stroke shocks, up to 2.5" of preload is acceptable. If more preload is needed to achieve ride height a stiffer spring rate is required. Too much preload may lead to coil bind, causing ride quality to suffer.