ridetech

INSTALLATION INSTRUCTIONS

Part # 11009546

C5/C6 Caliper Bracket Kit

GM Hub Spindle

www.ridetech.com
812.482.2932

Please Read And Understand All Instructions And Warnings Prior To The Installation Of This Product.

Congratulations on your new Ridetech product! It's an honor that you've selected the Ridetech brand to upgrade your ride. Our products are developed around quality and performance without compromise. We're confident you'll have many years (and miles) of pure driving enjoyment.
Thank you for choosing Ridetech!

Road Map

Exploded View 3

Bracket Installation 4-6

COMPONENTS			
Item #	**Part #**	**Description**	**Qty**
1	90003548	Caliper Bracket - Driver	1
1	90003547	Caliper Bracket - Passenger (Not Shown)	1
2	90003549	Caliper Bracket Spacer	4

HARDWARE KIT: 99010239			
BRACKET TO CALIPER			
3	99141007	M14-2.0 X 45mm Hex Bolt	4
4	99143001	M14 Flat Washer	4
SHIM PACK			
5	99623005	Shim .016" thick, 5/8" ID	8
6	99623006	Shim .032" thick, 5/8" ID	8
BRACKET TO SPINDLE			
7	99501062	1/2"-13 x 1 1/4" Hex Bolt	2
8	99501075	1/2"-13 x 1 1/4" FHSCS	4
9	99503014	1/2" SAE Flat Washer	2
10	99503017	Shim .063" thick, 1/2" ID	6

THIS BRACKET KIT IS DESIGNED TO ADAPT C5/C6 CORVETTE BRAKES TO THE RIDETECH HUB SPINDLE.

EXPLODED VIEW

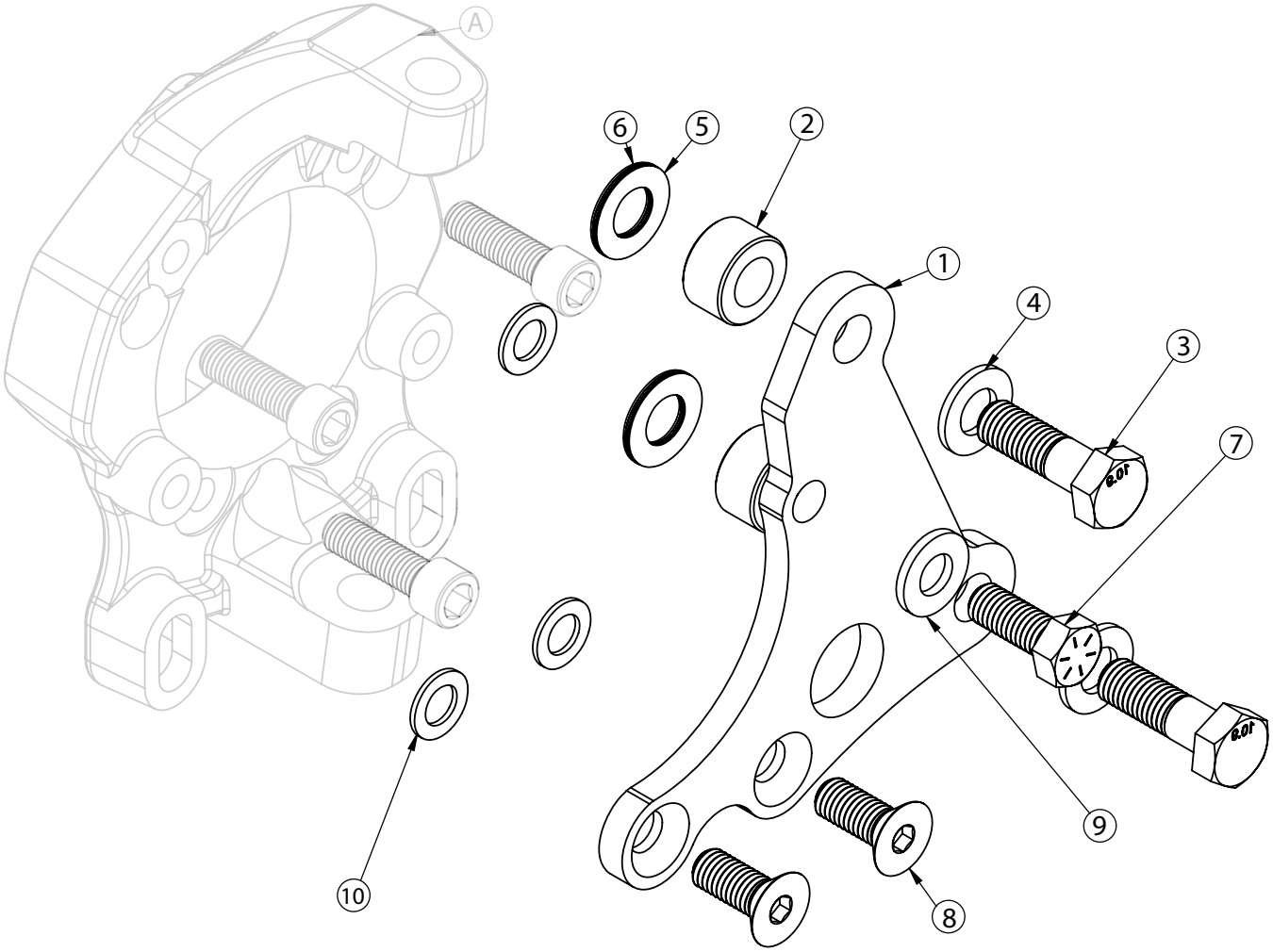

These spindles are designed around OEM C5/C6 Corvette brakes.
Aftermarket brakes that are designed for these cars will also fit this spindle.

Bracket Installation

Before you begin...

Caliper bracket and brake mounting may vary depending on the brake kit being used.

We recommend mocking up the brakes with clean, dry threads before applying any loctite to the hardware for final assembly.

This kit includes shims for mounting the caliper brackets and calipers. The caliper brackets will use 1/2" ID shims. The caliper spacers will use 5/8" ID shims.

The installation steps below are shown with the spindle off the car so it can be shown clearly.

1. If shimming is necessary, lay a .062" thick, 1/2" ID shim on each of the caliper bracket mounting holes (Figure 1).

Figure 1

2. The caliper brackets are side specific. They have a D & P stamped in them. Lay the correct caliper bracket on top of the shims, aligning the mounting holes with the mounting holes of the bracket. The counter-sunk holes on the bracket should be facing up (Figure 2).

Figure 2

Bracket Installation

3. Insert a 1/2"-13 x 1 1/4" flat head socket cap screw in each of the lower mounting holes. Install a 1/2" flat washer on a 1/2"-13 x 1 1/4" hex bolt and insert it in the upper mounting hole (Figure 3).

Torque the hardware to **75 ft-lbs**.

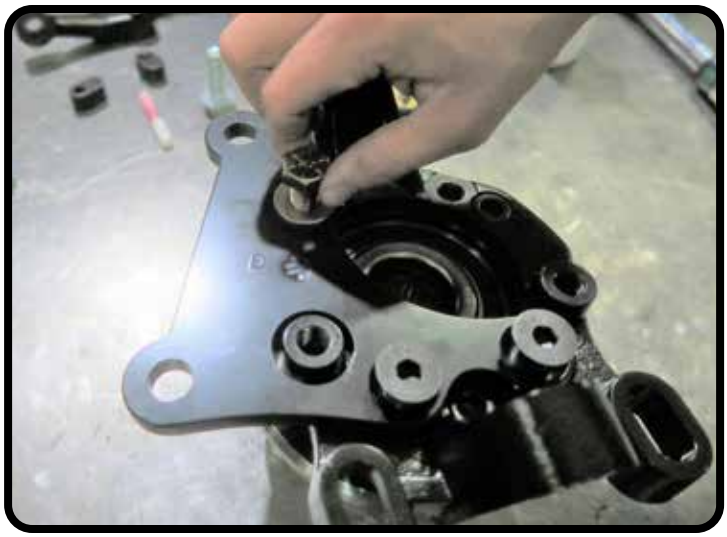

Figure 3

4. Install the rotor on the hub. Thread some lug nuts on the threads of the hub to hold the rotor tight on the hub (Figure 4).

Figure 4

5. This kit includes spacers that will be installed between the caliper bracket and caliper mount (Figure 5).
Install a M14 flat washer on each of (2) M14-2.0 x 45mm hex bolts. Insert the bolts through the caliper bracket, installing a spacer on each bolt. Align the caliper mount with the hardware and thread in the bolts.

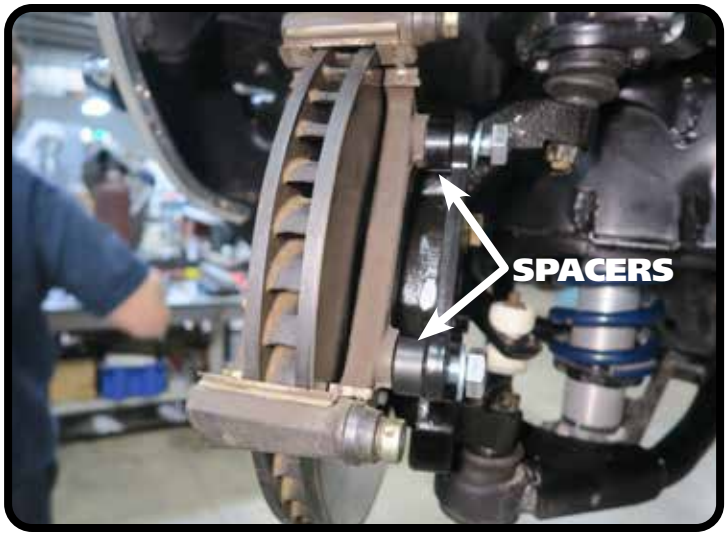

Figure 5

Bracket Installation

6. You can use feeler gauges to measure the distance between the caliper bracket and rotor to center the bracket on the rotor. If the caliper mount is tighter on the back side, put shims on the caliper bracket/spindle.
If the caliper bracket is tighter on the front side, put shims between the caliper bracket/ caliper mount.

Note: If you are installing aftermarket brakes, refer to the brake kit instructions for measuring the caliper placement.

Once you are satisfied with the fitment, apply red loctite to the hardware and torque to the values below.

1/2" bracket to spindle hardware: **95 ft-lbs**
M14 hardware: **125 ft-lbs**

7. Install the brake pads and caliper.

8. Finish plumbing the brakes and bleed the system.

Figure 6

Figure 7