ridetech

# INSTALLATION INSTRUCTIONS

## Part # 11167197

# Rear Bolt-In 4-Link System

## 1967-1969 GM "F" Body

www.ridetech.com
812.482.2932

**Please Read And Understand All Instructions And Warnings Prior To The Installation Of This Product.**

Congratulations on your new Ridetech product! It's an honor that you've selected the Ridetech brand to upgrade your ride. Our products are developed around quality and performance without compromise. We're confident you'll have many years (and miles) of pure driving enjoyment.
Thank you for choosing Ridetech!

## Road Map


| | |
|---|---|
| Safety and Pre-Installation Notes | 3 |
| Recommended Tools & Torque Values | 4 |
| Exploded View & Parts Listing | 5-6 |
| Disassembly | 7 |
| Cradle Installation | 8-10 |
| Lower Bar Mount Installation | 11-12 |
| Lower Shock Mount Installation | 13-14 |
| Lower Bar Installation | 15-16 |
| Upper Bar Axle Tab Installation | 17-18 |
| Upper Bar & Block-Off Plate | 19 |
| Coilover/ShockWave Installation | 20-21 |
| Riv-Nut Installation Guide | 22 |
| R-Joint Bar Assembly | 23 |
| Setting Pinion Angle | 24 |

# SAFETY FIRST

**Always use jack stands (if not using a lift). Never rely solely on a hydraulic jack to support the vehicle.**

**Always raise the vehicle on a clean and level surface. Use wheel chocks when necessary.**

**Be sure to wear proper Personal Protective Equipment (PPE) when welding.**

**Always wear eye protection (Z87.1) when operating power tools.**

# PRE-INSTALLATION NOTES

**The factory shocks and springs are not compatible with this system. This 4-link system is designed for use with Ridetech Coilovers or Shockwaves and a Ridetech Musclebar sway bar.**

- In rare cases, the dimension between the frame rails on your F-Body may vary from the dimension of the Ridetech Upper Cradle. Variation in the OEM manufacturing specs does occasionally happen and is out of our control. We have included in this kit a pair of 1/16" shims and a pair of 1/8" shims to aid in accommodating any potential variation you might encounter on your vehicle.

**Ridetech recommends this system be installed by a professional technician or experienced, reputable mechanic. Modification or improper installation of this product may result in loss of warranty. Proper installation and setup of your suspension is critical to the safe and enjoyable operation of your vehicle. Failure to follow the guidelines and specifications provided in these instructions may result in damage to your vehicle and/or death or serious injury to you, your passengers, or other motorists. Ridetech will not be held liable for any damage, loss or injury occurring from the use of this product outside of its intended application and design parameters.**

# RECOMMENDED TOOLS

- Jack Stands
- Floor Jack
- Tape Measure
- Torque Wrench
- Angle Finder
- SAE Socket/Wrench Set
- Cutting/Grinding Tool
- 4.5” Tall Wood Block
- Welding Equipment
- Red Loctite

# TORQUE SPECIFICATIONS

| LOCATION | TORQUE SPEC |
|---|---|
| Cradle Mounting Bolts | 23 ft-lbs |
| Front Factory Leaf Spring Mount | 30 ft-lbs |
| Lower Axle Bracket | 55 ft-lbs |
| Lower Shock Mount To Axle Bracket | 75 ft-lbs |
| Lower Shock Mount Stud | 65-75 ft-lbs |
| Upper Shock Mounting | 55 ft-lbs |
| Lower Shock Mounting | 40 ft-lbs |

# EXPLODED VIEWS AND PARTS LISTING

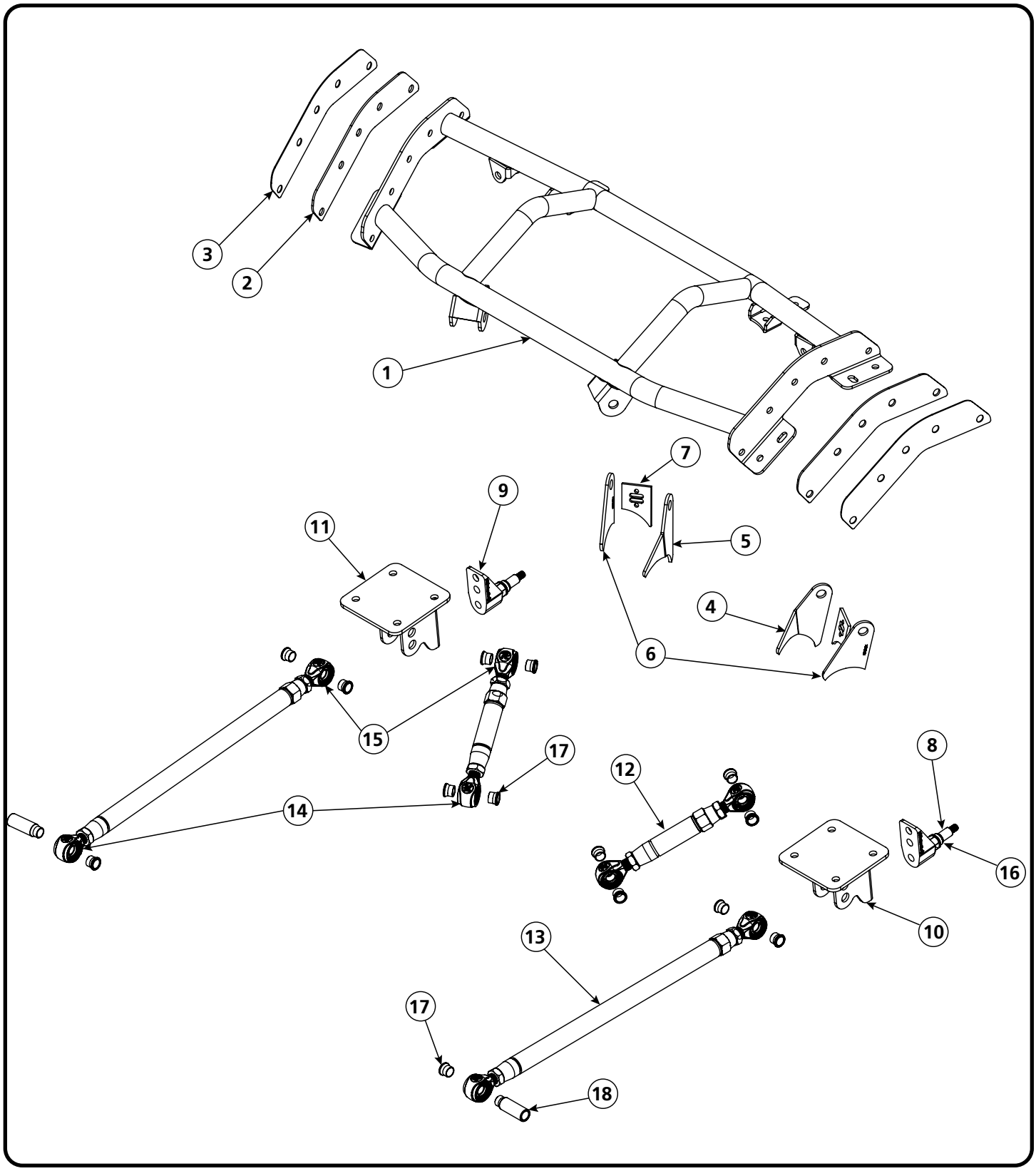

# EXPLODED VIEWS AND PARTS LISTING

| ITEM # | PART # | DESCRIPTION | QTY |
|---|---|---|---|
| 1 | 90003634 | Upper Cradle | 1 |
| 2 | 90003636 | Cradle Shim Plate .125" | 2 |
| 3 | 90003637 | Cradle Shim Plate .059" | 2 |
| 4 | 70013049 | Upper Inner Bar Tab - Driver | 1 |
| 5 | 70013050 | Upper Inner Bar Tab - Passenger | 1 |
| 6 | 70013051 | Outer Upper Bar Tab | 2 |
| 7 | 70013052 | Axle Tab Rear Brace | 2 |
| 8 | 70002825 | Lower Shock Stud | 2 |
| 9 | 90001624 | Aluminum Lower Shock Mount | 2 |
| 10 | 90002077 | Lower Axle Mount - Driver | 1 |
| 11 | 90002078 | Lower Axle Mount - Passenger | 1 |
| 12 | 90003090 | Upper Bar | 2 |
| 13 | 90003096 | Lower Bar | 2 |
| 14 | 90001318 | RH R-Joint Rod End | 4 |
| 15 | 90001319 | LH R-Joint Rod End | 4 |
| 16 | 90002067 | Lower Shock Spacer | 4 |
| 17 | 70013334 | R-Joint Spacer | 14 |
| 18 | 70013537 | Front Lower R-Joint Spacer | 2 |
| | 90000523 | Shock Block-Off Plate (NOT SHOWN) | 2 |
| | 99371050 | 3/8-16 X 1 1/2" Conical Body Bolt (NOT SHOWN) | 6 |
| | 99372009 | 3/8-16 U-NUT (NOT SHOWN) | 6 |
| | 85000008 | RIV-NUT INSTALLATION TOOL (NOT SHOWN) | 1 |
| | 70010694 | Bar Tab Setting Jig (NOT SHOWN) | 2 |

**HARDWARE KIT: 99010268**

| PART # | DESCRIPTION | QTY |
|---|---|---|
| **4 LINK BARS** | | |
| 99621004 | 5/8-18 X 3 Hex Cap Screw | 6 |
| 99622006 | 5/8-18 THIN NYLON JAM NUT | 6 |
| 99623001 | 5/8 SAE FLAT WASHER ZINC GR 8 | 12 |
| **CRADLE MOUNTING** | | |
| 99371005 | 3/8-16 X 1 1/4 Hex Cap Screw | 18 |
| 99372007 | 3/8-16 RIV-NUT | 18 |
| 99373002 | 3/8 SAE FLAT WASHER | 18 |
| 99373006 | 3/8 SPLIT Lockwasher | 18 |
| 85000007 | 17/32 DRILL BIT | 1 |
| **LOWER SHOCK MOUNT AND SHOCK MOUNTING** | | |
| 99501026 | 1/2-13 X 2 1/4 Hex Bolt | 2 |
| 99502007 | 1/2-13 USS THIN NYLOCK NUT | 2 |
| 99501019 | 1/2-13 x 1 1/4 USS HEX BOLT | 2 |
| 99501046 | 1/2-13 x 1 3/4 USS HEX BOLT | 2 |
| 99502001 | 1/2-13 NYLON NUT | 4 |
| **LOWER BAR MOUNT TO AXLE** | | |
| 99432007 | 7/16-20 NYLOK NUT ZINC GR 8 | 8 |

| PART # | DESCRIPTION | QTY |
|---|---|---|
| **FRONT LOWER BAR** | | |
| 99621007 | 5/8-18 X 5 Hex Cap Screw | 2 |
| 99622006 | 5/8-18 THIN NYLON JAM NUT | 2 |
| 99623001 | 5/8 SAE FLAT WASHER | 4 |
| **UPPER 4 LINK TAB SET JIG** | | |
| 99371001 | 3/8-16 X 3/4 Hex Cap Screw | 2 |
| 99372004 | 3/8-16 HEX FINISH NUT | 2 |
| **SHOCK STUD** | | |
| 99432002 | 7/16-20 NYLOK NUT | 2 |
| 99433002 | 7/16 SAE FLAT WASHER | 2 |
| 99623004 | 5/8 SAE FLAT WASHER | 2 |
| **4 LINK BAR ASSY** | | |
| 99752004 | 3/4-16 HEX FIN JAM NUT | 4 |
| 99752006 | 3/4-16 LEFT HEX FIN JAM NUT | 4 |
| 90002276 | Anti-Seize Nickel Compound 2ml | 2 |

# Disassembly

**NOTE:** You may prefer to assemble the upper & lower R-Joint bars prior to installing the cradle. If so, please refer to "R-Joint Bar Assembly" instructions on page 23. They will not be needed until step 15.

**1.** Raise the vehicle to a safe and comfortable working height. Use a lift or jack stands to support the vehicle in a manner that allows the suspension to hang freely. You will also need a method of raising and lowering the differential.

**2.** Support the axle and remove the leaf springs, shocks, and tail pipes. Refer to the factory service manual for proper disassembly procedures. Retain the front leaf spring mounts. They will be used with the 4-link bars. You also may need to detach the fuel line from the frame rails.

**3.** Remove the factory pinion snubber. This is necessary for clearance of the upper cradle. The snubber mount may remain (Figure 1).

Figure 1

**4.** Remove the factory bump stops on each side (Figure 2).

Figure 2

**5.** Position the cradle in the car. The front bar of the cradle should fit snuggly up against the body above the pinion-snubber mount.

The mounting tabs on each side of the cradle should be sitting flush against the frame rails (Figure 3).

Figure 3

**6.** On some vehicles, variances in the vehicle OEM manufacturing specs might result in a slight gap between the mounting tabs and the frame rails (Figure 4).

If no gaps are present, you may proceed to step 8.

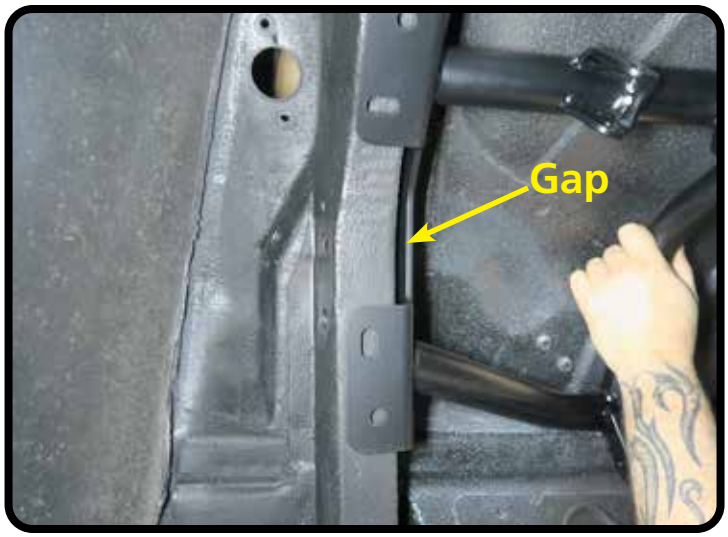


Figure 4

**7.** If you experience some variance on your vehicle, you may use the 1/16" and/or 1/8" shims included with this kit to fill the gaps (Figure 5).

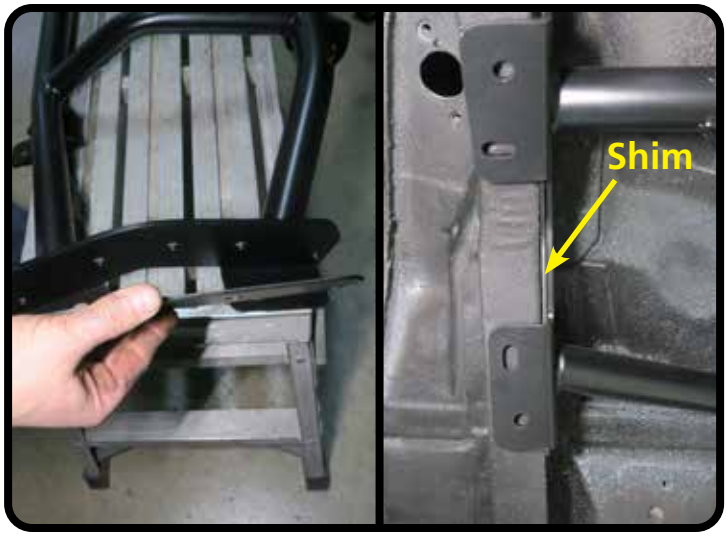


Figure 5

**8.** Once you have properly positioned the cradle, you'll need to temporarily secure it in place while you locate and mark the holes that will be drilled for the Riv-Nuts.

Threaded jack stands work well to hold the cradle in place. For additional security, you may also choose to add a couple temporary fasteners on each side as shown in Figure 6. We recommend using the slotted holes if you choose to install temporary fasteners.

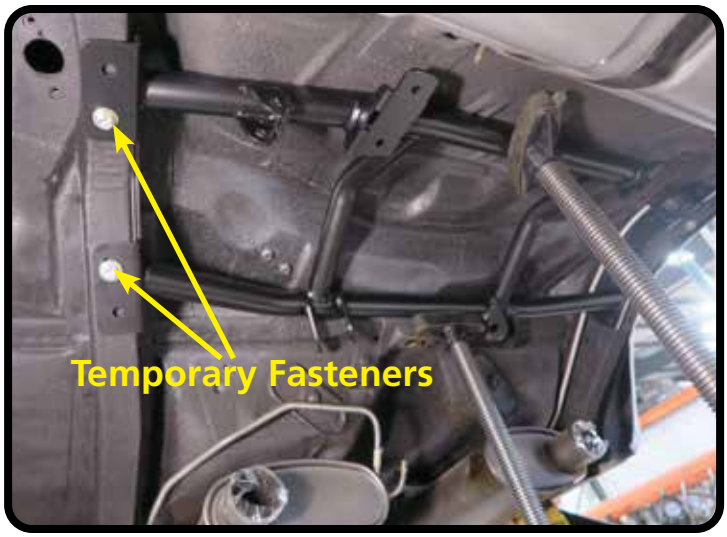


Figure 6

**9.** Mark the holes for the frame mounts. Mark the slotted holes in the center of the slot. These holes will use Riv-Nuts to bolt the cradle to the frame. The holes need to be centered as much as possible. Make sure to mark all 9 holes in each frame rail.

We marked our holes with a couple "bumps" from the 17/32" drill bit supplied in the 99010268 hardware kit (Figure 7).

Figure 7

**10.** Once all hole locations have been marked, remove the cradle to drill the holes and install the Riv-Nuts. The holes for the Riv-nuts should be drilled with the supplied 17/32" drill bit (Figure 8).

We suggest first drilling a smaller pilot hole to make it easier to drill with the 17/32" drill bit. Drill all 18 holes in the frame rails.

Figure 8

**11.** Once you have drilled all the holes, install the Riv-nuts in the frame rails (Figure 9).

**NOTE: Refer to the Riv-Nut installation instructions on PAGE 22 for proper Riv-Nut installation procedure.**

Figure 9

**12.** Confirm you have installed all 18 Riv-Nuts in the frame rails (Figure 10).

There should be 9 on each side.

Figure 10

**13.** Install a 3/8" split lock washer & 3/8" flat washer on each of the 3/8"-16 x 1 1/4" bolts supplied in the "Cradle Mounting" hardware bag. Reposition the cradle in the car, lining up the mounting holes with the Riv-Nuts. Thread a 3/8"-16 bolt into each Riv-Nut location (Figure 11).

**Torque to 23 ft-lbs.**

Figure 11

# Lower Bar Mount Installation

**14.** Retrieve the factory leaf-spring mounts that were removed in step 2. The bolt hole in the sides of each of the mounting brackets must be drilled out to 5/8" (Figure 12).

**NOTE:** If you have not already assembled the R-Joint bars, assemble them now. Refer to the "R-Joint Bar Assembly" instructions on page 23.

Figure 12

**15.** This bar setup is designed to be offset to the inside of the car for better wheel and tire clearance. The wider spacer is used on the outboard side of the R-Joint/mount, with the narrow spacer on the inside.

Insert (1) wide and (1) narrow spacer into the R-Joint of the lower bar as shown in Figure 13.

Figure 13

## R-JOINT SPACER INSTALLATION

Install the spacers by inserting the SMALL side of the spacer into the Center Pivot Ball. Push them in until they bottom out and stop.

**LOWER FRONT R-JOINT**

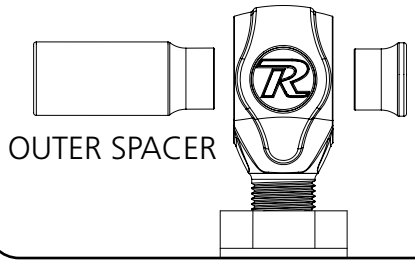


**ALL OTHER R-JOINTS**

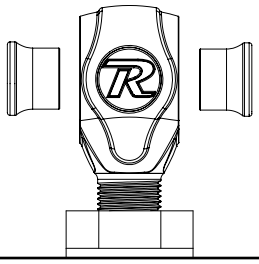

**R-Joint Thread Engagement:**

Minimum thread showing - 0
Nominal thread showing - 1/4"
Maximum thread showing - 5/8"

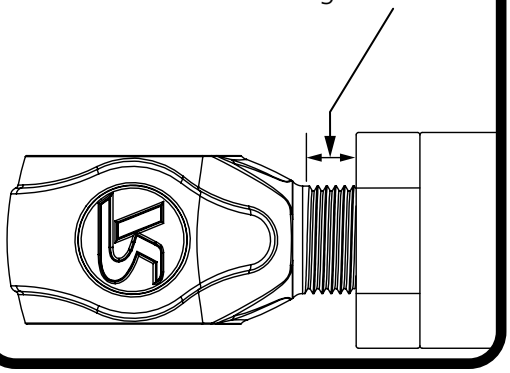

# Lower Bar Mount Installation

**16.** Place the R-Joint with spacers into the leaf spring mount. Install a 5/8" washer on a 5/8"-18 x 5" bolt. Insert the bolt on the side of the bracket with the narrow R-Joint spacer (Figure 14). The threads of the bolt must be pointing to the OUTSIDE of the car.

Figure 14

**17.** Install a 5/8" flat washer and 5/8"-18 thin nylok nut onto the bolt. Again, ensure the threaded end of the bolt is pointing to the outside of the car (Figure 15).

**Tighten the bolt/nut enough to eliminate any gaps.**

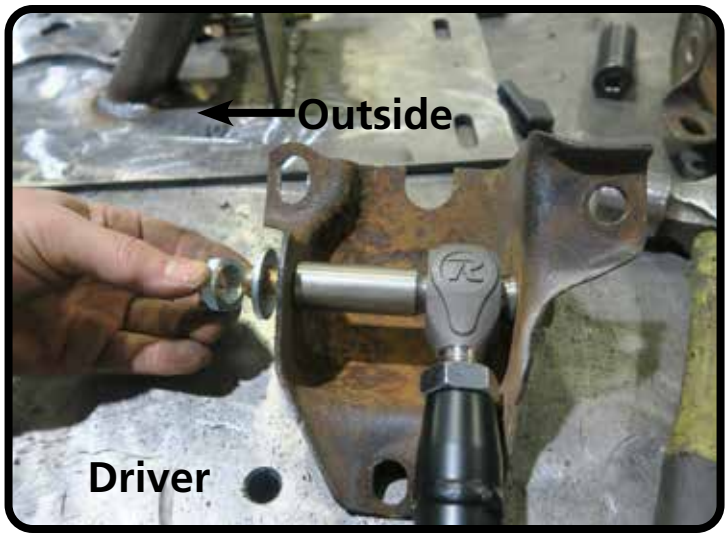


Figure 15

**18.** Attach the lower bar/mount assembly to the car. New 3/18"-16 u-nuts and 3/8-16" x 1 1/2" conical body bolts are supplied in the hardware kit. Install the new u-nuts in place of the OEM u-nuts. Hold the assembly in place, lining up the holes with the u-nuts. There is a tab bent up on the mount that indexes into a hole in the body. Make sure the tab is indexed into the alignment hole.

**Torque the mounting bolts to 30 ft-lbs.**

Repeat steps 15-18 on the opposite side.

Figure 16

# Lower Shock Mount Installation

**NOTE:** The lower axle mounts have the bar mounts offset toward the centerline of the car for improved wheel and tire clearance. See Figure 17 to confirm you are installing the correct mount on the correct side of the car.

***The perspective in Figure 17 is as if you are standing under the car looking up.**

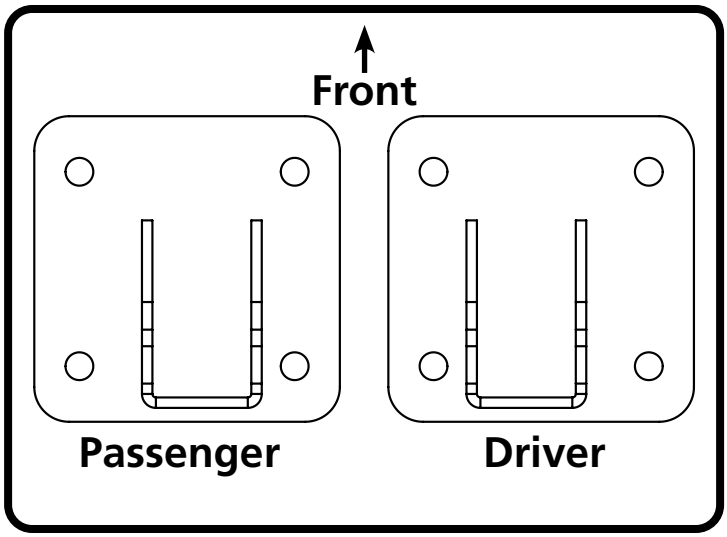


Figure 17

**19.** Attach the lower axle bracket to the leaf spring pad on the axle using the factory T-bolts/U-bolts and the 7/16″-20 nylok nuts supplied in the hardware kit. The four mounting holes for the lower shock mount should be facing the rear of the car (Figure 18).

**Torque the nuts to 55 ftlbs.**

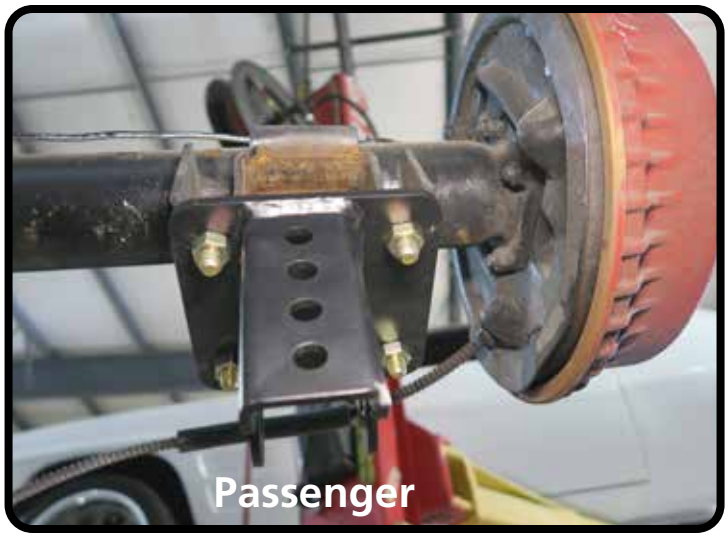


Figure 18

**20.** The 67-69 F-body came with either a mono-leaf spring or multi-leaf spring. Before installing the lower shock mount to the lower axle bracket, you must first determine which spring pad you have. See Figure 19 to help identify which spring pad you have.

See **Step 21** if you have the **mono-leaf**.

See **Step 22** if you have the **multi-leaf**.

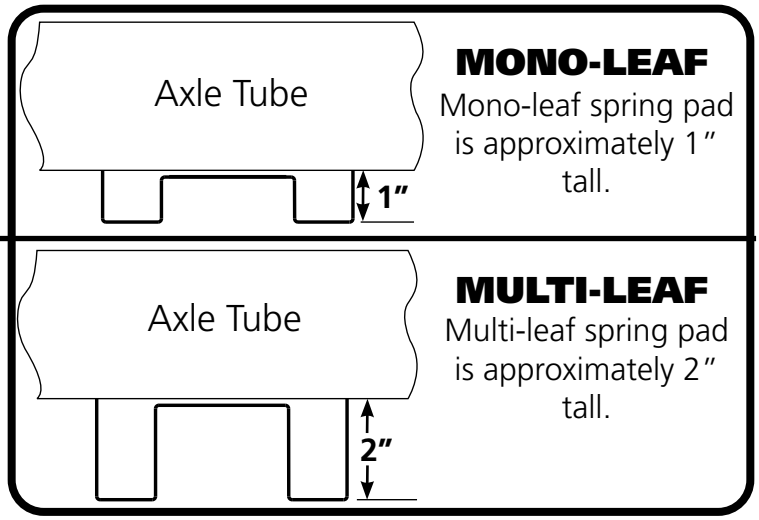


Figure 19

# Lower Shock Mount Installation

**21. MONO-LEAF:** The Monoleaf setup uses the BOTTOM 2 HOLES for mounting. Insert the 1/2"-13 bolts through the aluminum shock mount with the 1 1/4" long bolt in the top hole of the aluminum mount, and the 1 3/4" bolt in the bottom hole. Insert the bolts through the axle mount and install a 1/2" nylok nut on each bolt. Repeat on the opposite side.

**Torque the bolts/nuts to 75 ftlbs.**

Proceed to step 23.

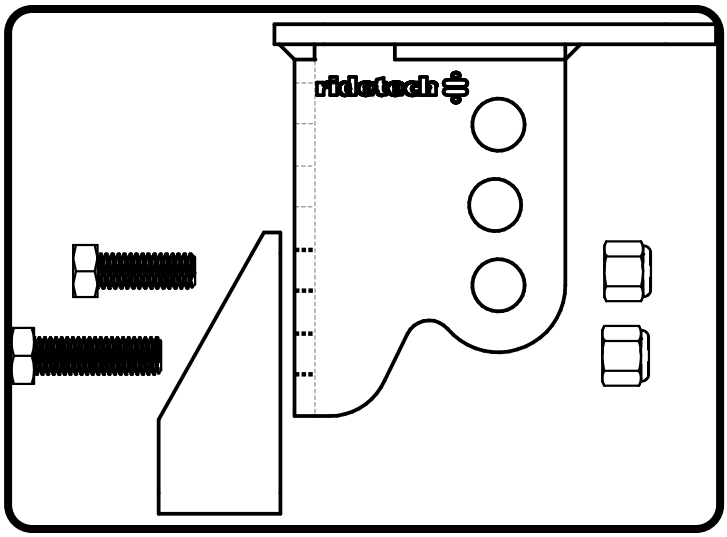


Figure 20

**22. MULTI-LEAF:** The Multileaf setup uses the MIDDLE 2 HOLES for mounting. Insert the 1/2"-13 bolts through the aluminum shock mount with the 1 1/4" long bolt in the top hole of the aluminum mount, and the 1 3/4" bolt in the bottom hole. Insert the bolts through the axle mount and install a 1/2" nylok nut on each bolt. Repeat on the opposite side.

**Torque the bolts/nuts to 75 ftlbs.**

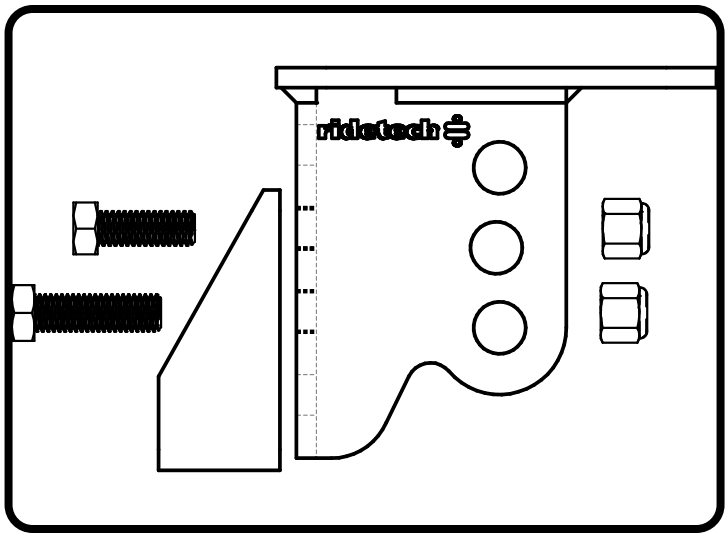


Figure 21

**23.** Install the shock stud into the lower shock mount. Install a 5/8" flat washer onto the 5/8"-18 threads of the shock stud. Apply Red Loctite to the 5/8" threads of the stud. Thread the shock stud into the threaded hole of the aluminum lower mount (Figure 22). Repeat on the opposite side.

**Torque the shock stud to 65-75 ftlbs.**

Figure 22

# Lower Bar Installation

**NOTE:** The lower axle mount has multiple options for attaching the lower bar. The lower bars must be mounted in the correct location to optimize the geometry of the 4-link. The type of leaf spring setup you have will dictate which set of holes to use. Refer back to Step 20 (Figure 19) to determine your spring setup if necessary.

The **Mono-Leaf** setup will use the **bottom** set of holes (Figure 23).

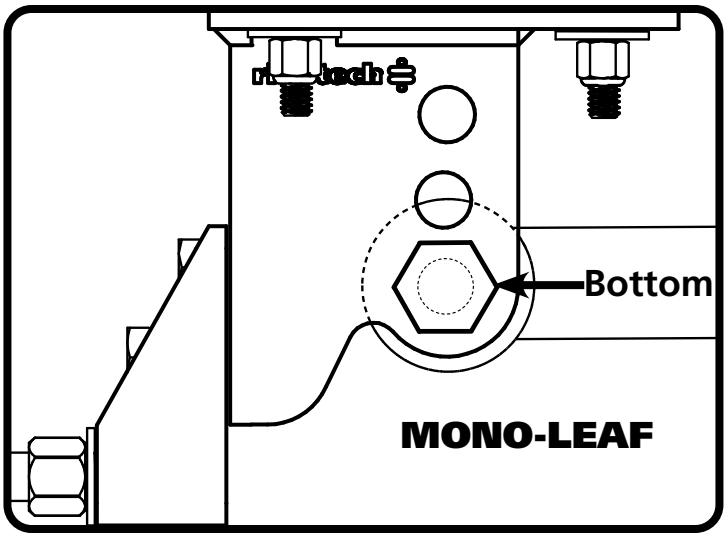


Figure 23

The **Multi-Leaf** setup will use the **middle** set of holes (Figure 24).

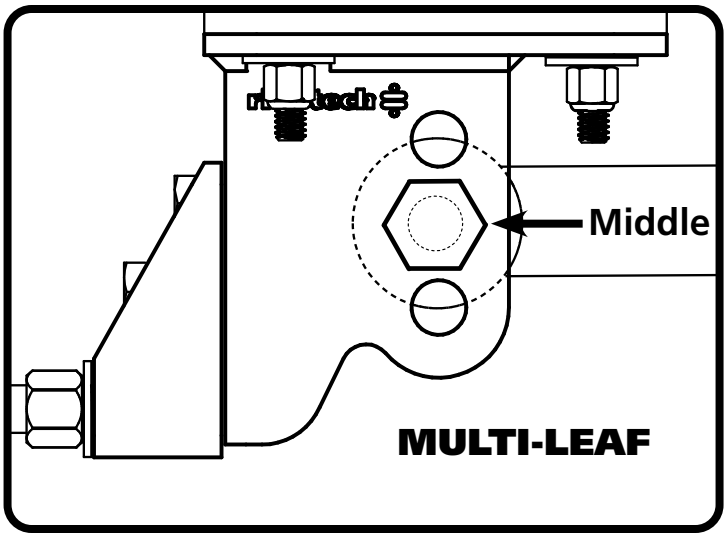


Figure 24

**24.** Once you have identified which set of mounting holes to use for the lower bar, insert a 70013334 spacer into each side of the R-Joint (Figure 25).

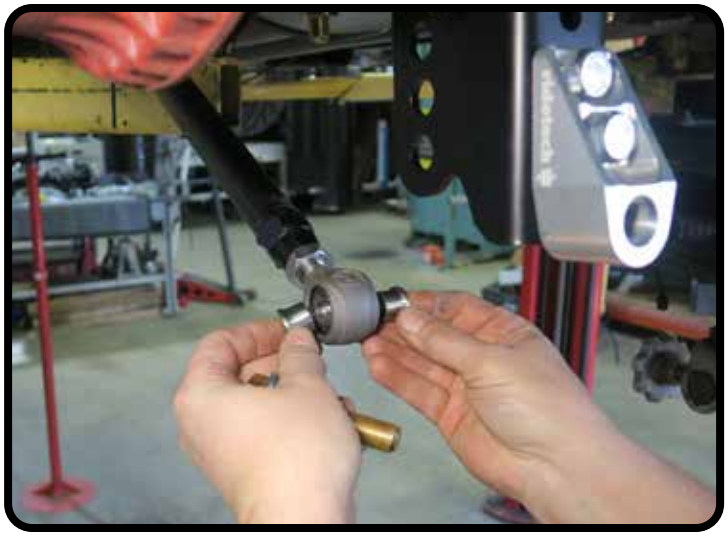

Figure 25

# Lower Bar Installation

**25.** Position the lower bar with spacers into the axle mount (Figure 26). Line up the R-Joint/spacers with the appropriate mounting hole for your leaf spring setup as outlined on the previous page.

Figure 26

**26.** Insert a 5/8"-18 x 3" hex bolt with 5/8" flat washer through the axle mount and R-Joint (Figure 27).

Threads facing inboard.

Figure 27

**27.** Install a 5/8" flat washer and 5/8"-18 Nylok nut onto the protruding threads (Figure 28).

**Tighten the bolt/nut enough to eliminate any gaps.**

Repeat on the opposite side.

Figure 28

# Upper Bar Axle Tab Installation

**28.** Use one of the assembled upper bars to set the length of the Bar Tab Setting Jig.

See the diagram in Figure 29. The bolts & nuts are from the hardware kit.

(Refer to "R-Joint Bar Assembly" on page 23 if you have not already assembled the upper bars)

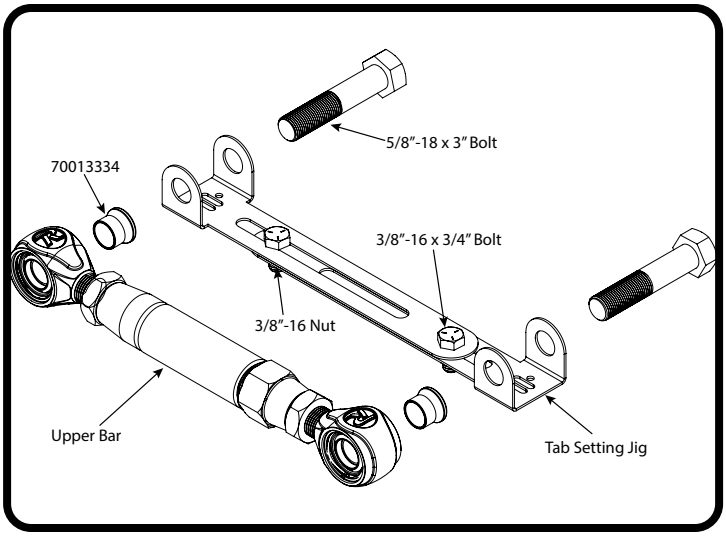


Figure 29

**29.** Position the rear axle at ride height, center the axle left to right between the quarter panels, and set your pinion angle.

Refer to the "Setting Pinion Angle" guide on page 24.

**NOTE:** To maintain ride height and pinion angle while making adjustments, it's helpful to place a 4 1/2" tall wood block between the axle and frame rail (Figure 30).

Eye-to-eye shock length should be approximately 14 1/2" at ride height.

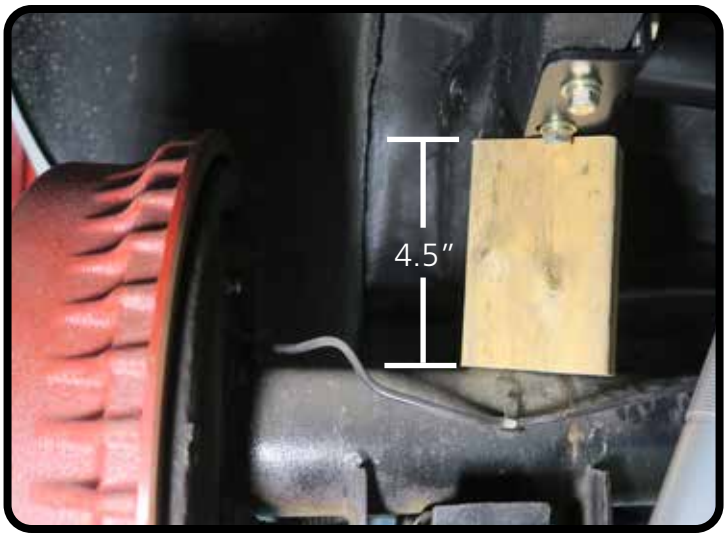


Figure 30

**30.** Using a 5/8"x 3" bolt, attach one end of the Tab Setting Jig to the upper bar mount on the cradle (Figure 31).

Do not tighten this bolt.

Figure 31

# Upper Bar Axle Tab Installation

**31.** Using another 5/8" x 3" bolt, attach the inner & outer axle tabs to the other end of the jig. The inner (bent) tab is Driver (70013049) and Passenger (70013050) specific. The bent part of the tab is positioned toward the front of the car. The short outer tab (70013051) goes to the outside of the car. The tabs must be positioned on the outside of the jig flanges (Figure 32).

**Do not tighten the bolt. The tabs should be allowed to move freely.**

**32.** Swing the jig w/tabs into place, allowing the tabs to rest freely on the axle. Verify ride height, pinion angle and axle center. Once you are satisfied with the fitment, tack weld the inner/outer tabs to the axle along with the back brace (Figure 33).
Repeat on the opposite side.

**NOTE:** You may find it necessary to grind or trim the tabs slightly to minimize the welding gap between the tabs and the axle.

**33.** Remove the jigs and temporarily install the upper bars with spacers (Figure 34). Once again verify ride height, pinion angle, and axle center. If everything looks good, remove the upper bars so they are not damaged when you finish welding the tabs.

Finish welding the axle tabs by laying welds on the inside and outside of the tabs, 1" at a time, and skipping around from side to side to avoid overheating the axle tube.

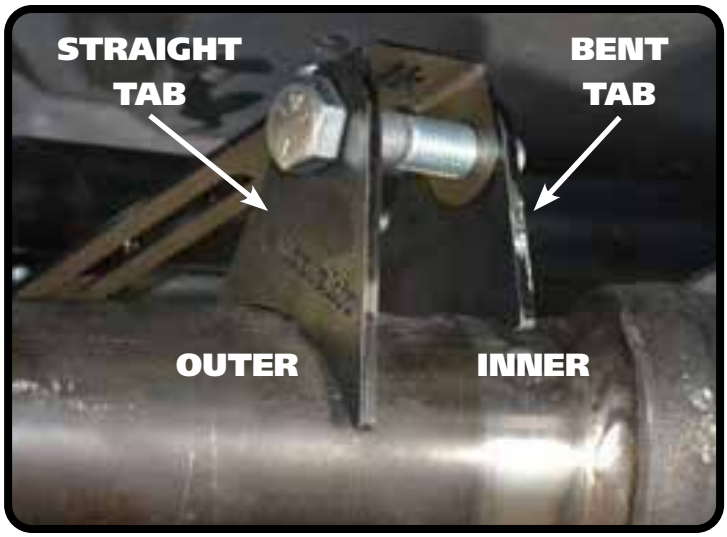

Figure32

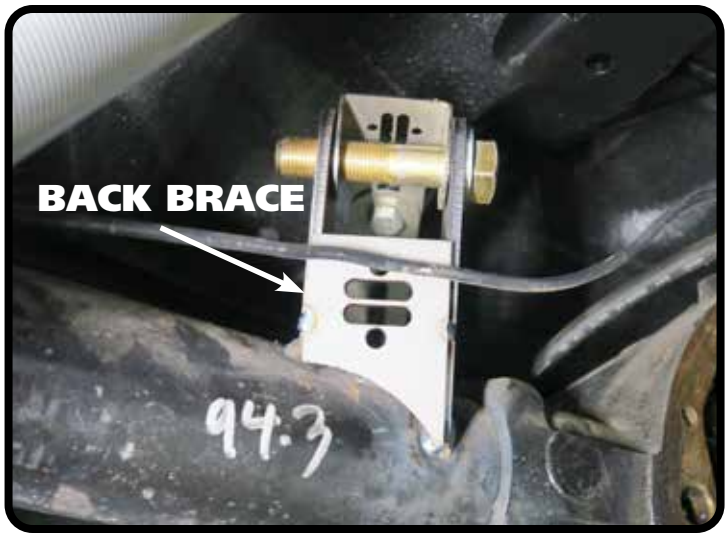

Figure 33

Figure 34

# Upper Bar & Block-Off Plate Installation

**34.** Once the tabs have cooled down, reinstall the upper bars using (1) 5/8″ x 3″ bolt, (2) 5/8″ flat washers, and (1) 5/8″ thin nylok nut on each bar end. Be sure to install a 70013334 spacer in each side of the R-joint (Figure 35).

**Tighten the bolts/nuts enough to eliminate any gaps.**

**NOTE:** If you have not already done so, remove the wood block spacer between the axle and frame.

**35.** Using the OEM shock-mounting hardware, bolt the Shock Block-Off Plates (Figure 37) in place of the OEM upper shock mounting locations (Figure 36).

**NOTE:** If you are running Mini Tubs, these mounts no longer exist on your vehicle.

Figure 35

Figure 36

Figure 37

# Coilover/ShockWave Installation

**36.** Install a 90002043 shock spacer into each side of the lower bearing on a Coilover, or the upper bearing on a ShockWave (Lower Coilover bearing shown in Figure 38).

**NOTE:** If you are installing Coilovers, we recommend installing them inverted (adjustment knob down).

***ShockWaves must be installed with the adjustment-knob eyelet up (non-inverted).**

**NOTE:** The 90002043 bearing spacers will be included with your Coilover or ShockWave kit.

**37.** Slide the Coilover/ShockWave assembly into the upper shock mount on the cradle. Position the adjustment knob so that the knob points inboard, toward the center of the car. Line up the hole in the spacers with the hole in the upper shock mount and insert a 1/2"-13 x 2 1/4" bolt and install 1/2"-13 Thin Nylok nut.

**38.** Install a 5/8" ID 90002067 spacer onto the lower Shock Stud (small side towards the shock body). Then slide the bottom of the Shock onto the stud (Figure 40).

**NOTE:** You may need to adjust the height of the rear axle to get the shock to slide onto the stud.

Figure 38

Figure 39

Figure 40

**39.** Install a second 5/8" ID 90002067 spacer onto the stud (small side towards shock), followed by a 7/16" Flat washer and 7/16" Nylok nut (Figure 41).

Figure 41

**40.** Tighten the upper and lower shock bolts (Figure 42).

**Torque the upper bolt/nut to 55 ft-lbs.**

**Torque the lower nut to 40 ft-lbs.**

Repeat on the opposite side.

**NOTE:** The designed ride height of the CoilOver/Shockwave eye-to-eye shock length is approximately 14 1/2" center-to-center.

Refer to the instructions in your Coilover or ShockWave kit for the shock tuning procedure.

Figure 42

# Riv-Nut® Installation & Specs

**1.** Drill hole in frame using the SUPPLIED DRILL BIT, keeping the drill square with the metal.

**2.** We recommend installing (2) 3/8" flat washers between the bolt head and the lower anvil of the installation tool. Thread a Riv-nut® onto the supplied Tool. Thread the Riv-nut all the way onto the tool until it stops.

**3.** Insert the tool and Riv-nut® into the drilled hole 90° to the frame rail.

**4.** The tool requires (1) 9/16" & (1) 5/8" wrench. A ratchet can be used on the top of the tool.

**KEEP THE TOOL AND RIV-NUT 90° TO THE SURFACE WHILE TIGHTENING**

**5.** Place a 5/8" wrench on the lower hex of the tool. Use a wrench or ratchet on the top hex to tighten.

**6.** Hold the wrench in one position and turn the TOP HEX CLOCKWISE to engage the Riv-nut®. Keep turning the TOP WRENCH until you feel a positive stop and you can't turn the TOP WRENCH anymore.

**7.** Break the tool loose by turning the TOP HEX counterclockwise and thread the tool out of the Riv-nut®

**THE DATA BELOW ILLUSTRATES THE STRENGTH OF THE RIV-NUT®**

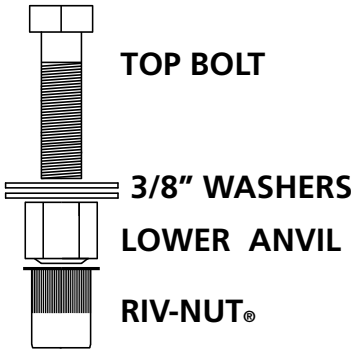


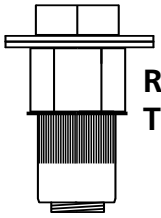


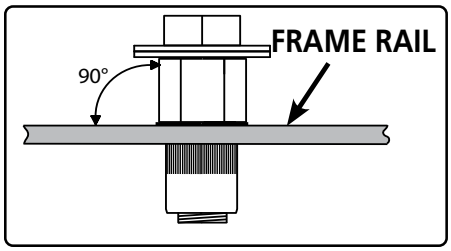


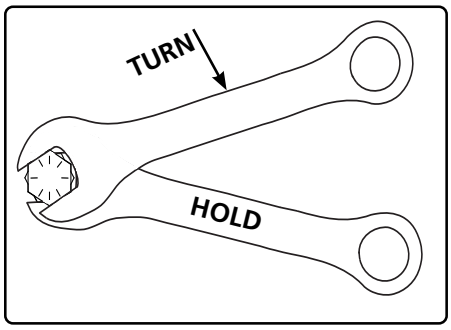


RIVNUT Fastener Engineering Data

| Upset Load (lbs.) | | |
|---|---|---|
| RIVNUT ® Size | Steel | |
| | Min. Grip | Max. Grip |
| 3/8-16 | 4965 | 5325 |

Fig. 1

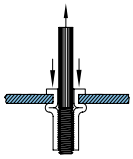

| Ultimate thread strength (lbs.) | | |
|---|---|---|
| RIVNUT ® Size | Steel | |
| | Min. Grip | Max. Grip |
| 3/8-16 | 11500 | 10450 |

Fig.2

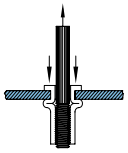

| Ultimate tensile strength (lbs.) | |
|---|---|
| RIVNUT ® Size | Steel |
| 3/8-16 | 3900 |

Fig. 3

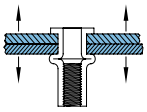

**Single-Shear Strength of 3/8" Grade 5 Bolt: 3,975.8 lbs**

# R-Joint Bar Assembly

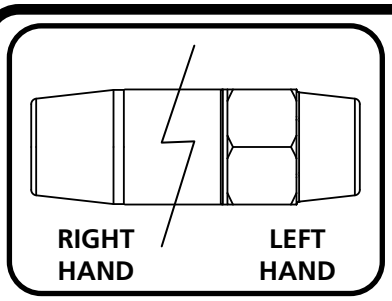

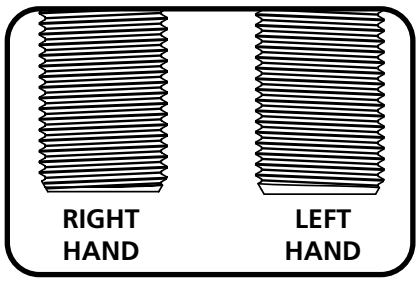


THE 4-LINK BARS, R-JOINTS, AND JAM NUTS HAVE RIGHT HAND AND LEFT HAND THREADS. THIS ALLOWS THE BAR TO BE ADJUSTED WITHOUT REMOVING IT. THE HEX END OF THE BAR IS LEFT HAND THREAD. THE LEFT HAND JAM NUT HAS AN COUNTERCLOCKWISE ARROW STAMPED INTO IT. IMAGE 3 WILL HELP YOU DETERMINE THE THREADS OF THE R-JOINTS.

**14a.** Component List:

1. 4-Link Bar
2. Right Hand Thread R-joint
3. Right Hand Thread Jam Nut
4. Left Hand Thread R-Joint
5. Left Hand Thread Jam Nut

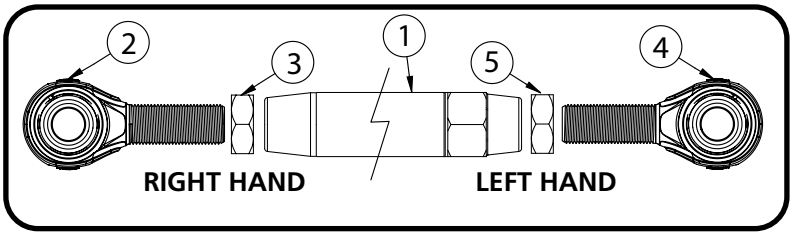


**14b.** Thread the jam nuts onto the threaded shank of the r-joints. Thread the nuts all the way on to the r-joint.

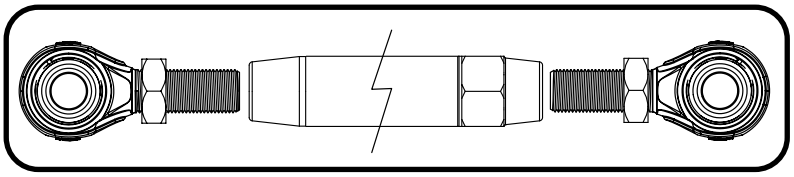

**14c.** ***Apply anti-seize to the threads of the r-joint.*** This will prevent the threads from galling.

**14d.** Thread the r-joints into the 4-link bar. Thread them in evenly until you achieve the correct center-to-center length.

***Upper Bar Length: 9 7/8"***
***Lower Bar Length: 25"***

***Nominal R-Joint Threads Exposed: 1/4"***
***Maximum R-Joint Threads Exposed: 5/8"***

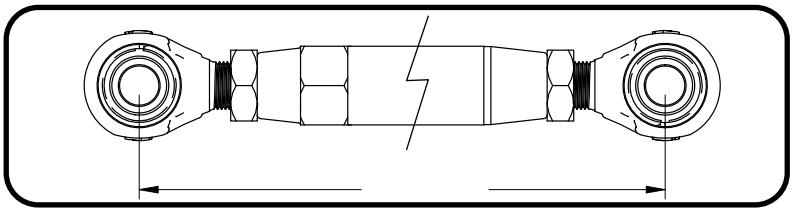

**14e.** After getting one bar length set, you can put a 5/8" bolt through the r-joints to simplify setting the next bar. Adjust the bar length of the 2nd bar until it will slip on and off the bolts. Torque the jam nuts 65-75 ft-lbs using an 1 1/8" crows foot on a torque wrench.

# Setting Pinion Angle

How do you set the pinion angle? On a single-piece shaft, you want to set it up where a line drawn through the center of the engine crankshaft or output shaft of the transmission and a line drawn through the center of the pinion are parallel to each other but not the same line (Figure 1).

Your transmission angle should be around 3 degrees down in the rear. If it is more or less than 3 degrees, you may want to consider changing it. Too little angle on the transmission reduces the amount of oil getting to the rear bushing. Too much transmission angle will increase the working angles of the u-joints which will increase the wear. With the transmission at 3 degrees down in the rear, you will want to set the pinion 3 degrees up in the front.

A simple way to do this is to place a digital angle finder or dial level on the front face of the lower engine pulley or harmonic balancer. This will give you a reading that is 90 degrees to the crank or output shaft unless you have real problems with your balancer. At the other end, you can place the same level or angle finder against the front face of the pinion yoke that is also at 90 degrees to the centerline. If you rotate the yoke up or down so both angles match, you have perfect alignment.

Road testing will tell you if you have it right. If you accelerate and you get an increase in vibration, then the pinion yoke is too HIGH. Rotate it downward in small increments of a degree or two until the problem goes away. If you get an increase in vibration when decelerating, then the pinion yoke is too LOW. Rotate it upward to correct it.

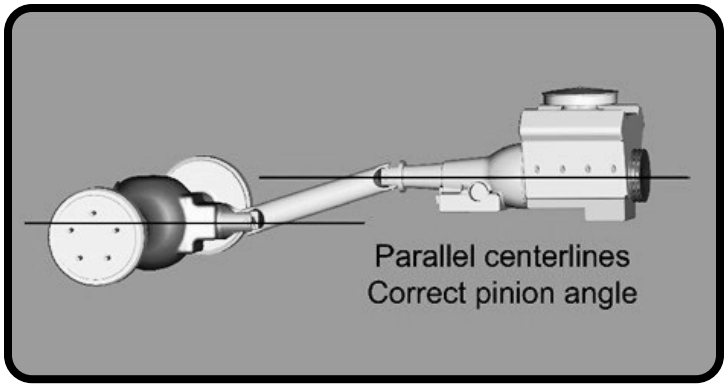


Figure 1

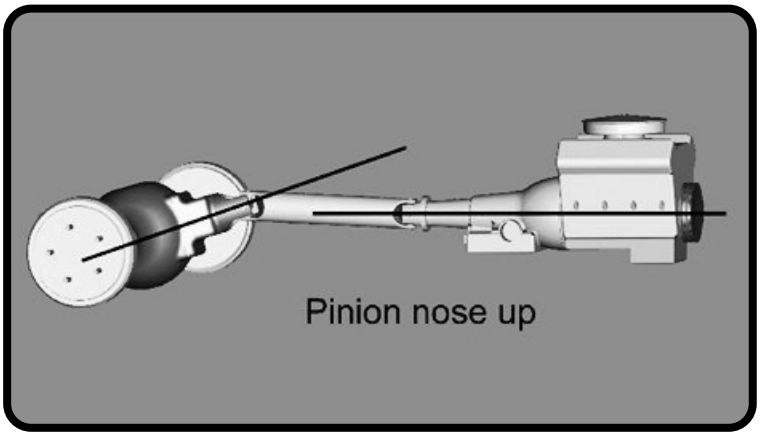


Figure 2

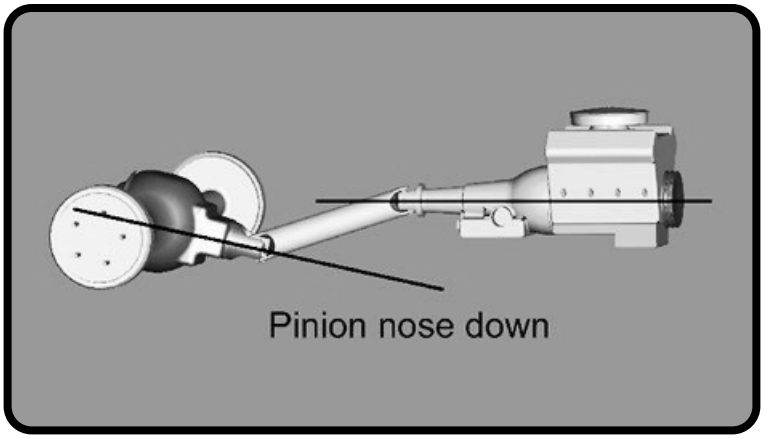


Figure 3