ridetech

INSTALLATION INSTRUCTIONS

Part # 11166510

Rear HQ Series Coil-Overs

1967-1969 GM F-Body

www.ridetech.com
812.482.2932

Please Read And Understand All Instructions And Warnings Prior To The Installation Of This Product.

Congratulations on your new Ridetech product! It's an honor that you've selected the Ridetech brand to upgrade your ride. Our products are developed around quality and performance without compromise. We're confident you'll have many years (and miles) of pure driving enjoyment.
Thank you for choosing Ridetech!

Road Map

Exploded View & Parts Listing	**3**
Coil-over Assembly	**4-5**
Adjusting Ride Height	**6-7**
Shock Tuning Guide	**8-9**

Coil-Over Dimensions	
Measured From Center-To-Center Of Shock Bearings	
Compressed	**11.23"**
Ride Height	**13.75" - 14.50"**
Extended	**16.43"**

EXPLODED VIEWS AND PARTS LISTING

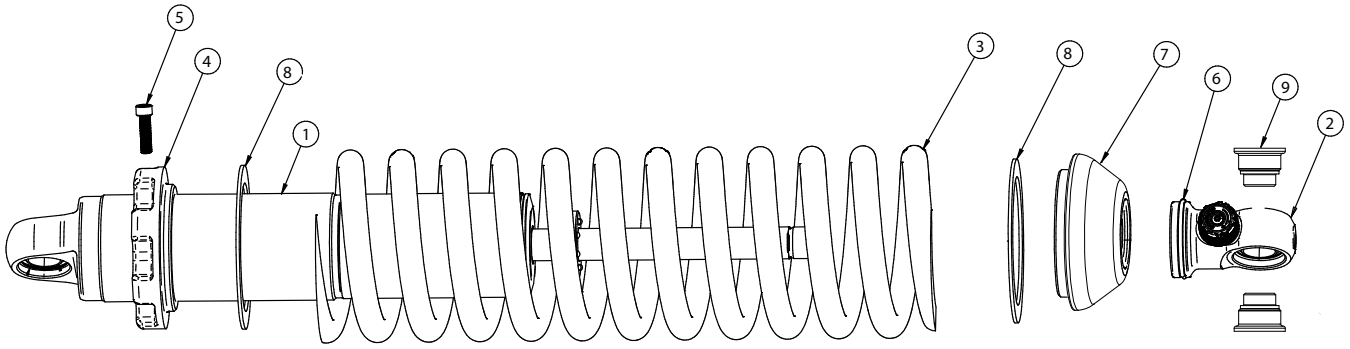

Item #	Part #	Description	QTY
1	982-10-805	5.2″ Stroke HQ Series Shock	2
2	815-05-022-KIT	Shock Eyelet	2
3	59120200	Coilspring 12″ 200lb	2
4	234-15-200	Lower Spring Adjuster Nut	2
5	99050001	Adjuster Nut Locking Screw	2
6	038-01-006-A	Retaining Ring	2
7	90002070	3/4″ Drop Cap	2
8	70010828	Delrin Spring Washer	4
9	90002043	1/2″ ID Upper Shock Bearing Spacer Half	4
	90001994	5/8″ ID Bearing	4
	90001995	Bearing Snap Ring	8

COILOVER ASSEMBLY INSTRUCTIONS

1. Thread the preload adjustment nut onto the shock from the bottom (Figure 1). A few threads of engagement is ok for now.

Figure 1

2. The rebound adjustment knob must be removed prior to installing the upper spring mount in step 4. Turn the adjustment knob clockwise until it stops, then remove the torx screw and the knob (Figure 2).

Figure 2

3. Slide a Delrin washer over the shock and onto the adjustment nut, followed by the coil spring (Figure 3).

Figure 3

4. With the adjustment knob removed, slide a Delrin washer over the eyelet and place on top of the coil spring, followed by the upper spring mount (Figure 4).

Figure 4

5. Slide the retainer clip over the upper eyelet and into the groove at the base of the eyelet. Make sure it snaps into place and is fully seated in the groove (Figure 5).

Figure 5

6. Reinstall the adjustment knob (Figure 6).

Once you have reinstalled the knob, you may want to turn the knob about 12 clicks counterclockwise since the rebound is currently set at "full stiff".

Figure 6

7. Thread the adjustment nut up the shock body to remove the slack and secure the spring and upper mount against the eyelet. Install the locking screw in the adjustment nut, but do not tighten yet (Figure 7).
This screw will be tightened after your preload has been set.

Figure 7

8. Your assembled coilover is ready to be installed on the vehicle.

Figure 8

ADJUSTING RIDE HEIGHT

NOTE: Optimal ride quality and handling typically occurs when the shock absorber is sitting between 40-60% of its full travel at ride height. However, measuring the shock can be difficult on some applications. If you do not wish to measure your shocks, an easier method that is still quite effective is to measure wheel travel. See Steps 1-4 below for this alternate method. If you've determined that your shock travel is good, you may skip to Step 5 to jump straight to making any necessary ride-height adjustments.

1. With coilovers installed and the preload set, lower the vehicle to the ground. With the entire weight of the vehicle on the wheels, jounce the suspension and roll the vehicle forward and backward to release any suspension bind.

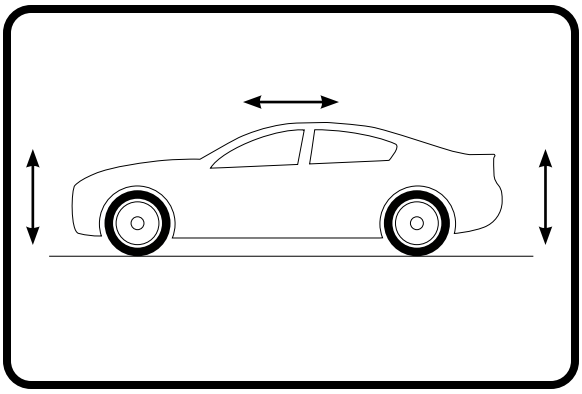

Figure 1

2. At the centerline of the wheel, take a measurement from the fender lip to the ground (Figure 2).

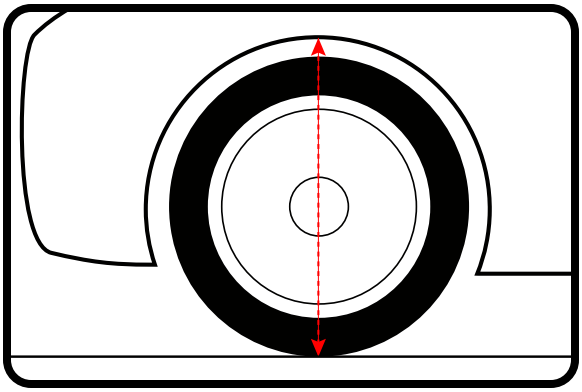

Figure 2

3. Lift the vehicle by the frame until the wheel is barely touching the ground. Take another measurement from the fender lip to the ground (Figure 3).

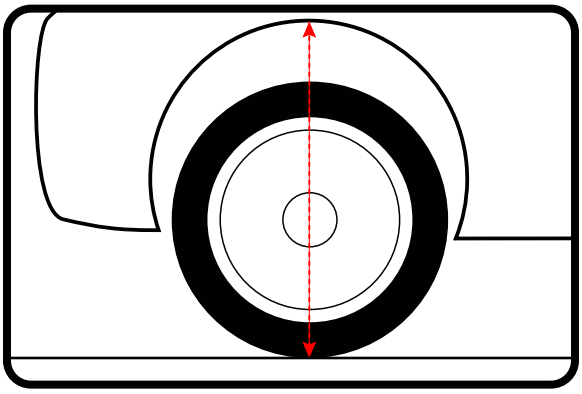

Figure 3

4. The difference between the measurements taken in Steps 2 and 3 is your **extension travel** at the wheel. A minimum of 1.5" of extension travel (at the wheel) is typically needed to prevent the shock from topping out. If you have more than 3" of extension travel, you may be at risk of bottoming out the shock and need to increase the ride height.

ADJUSTING RIDE HEIGHT

5. With coilovers installed and the preload set, lower the vehicle to the ground. With the entire weight of the vehicle on the wheels, jounce the suspension and roll the vehicle forward and backward to release any suspension bind. Evaluate your ride height.

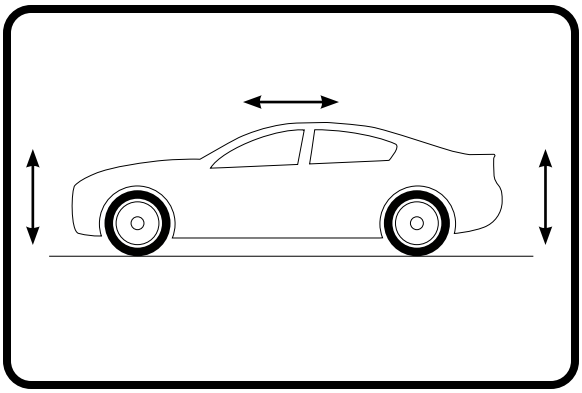

Figure 4

6. If you determine you need to adjust the ride height, raise the vehicle by the frame and allow the suspension to hang freely.

7. Loosen the locking screw on the coilover adjustment nut just enough to be able to turn the nut. **Do not remove the locking screw.** (Figure 5).

Figure 5

8. Measure the distance from the bottom of the adjustment nut to the flat of the shock body. We recommend recording this measurement for reference (Figure 6).

Figure 6

9. Using a spanner wrench, thread the nut up or down the shock body to achieve the desired ride height (Figure 7). Tighten the locking screw to secure the adjustment nut in place. Torque to **18 in-lbs**.

10. Lower the vehicle to the ground, jounce the suspension and roll the vehicle forward and backward to release any suspension bind.

11. Recheck your ride height. If you need to adjust, repeat Steps 6-10.

12. Once your desired ride height has been achieved, refer to the Shock Tuning Guide to dial in your shocks.

Figure 7

TUNING GUIDE
SINGLE-ADJUSTABLE SHOCKS

The Basics...

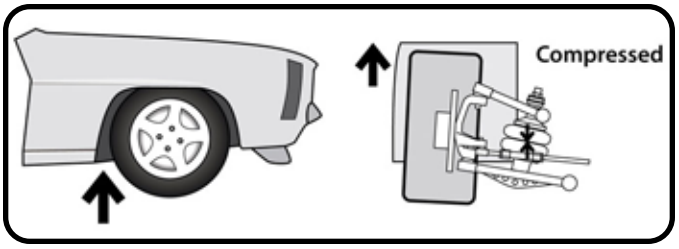

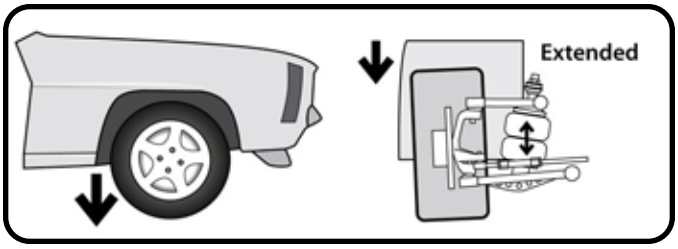

COMPRESSION

This typically occurs when you hit a bump in the road. The bump forces the wheel/tire/suspension assembly to "compress" or move upwards into the car.

REBOUND

Rebound is the opposite of compression. This occurs when the wheel/tire/suspension assembly falls into a pothole, or simply "rebounds" from being compressed.

Where Are The Knobs?

HQ Series Shocks

- **The adjustment knob is located on the top of the shock, either protruding from the side of the eyelet, or atop the stud.**
- **This knob provides rebound adjustment only.**

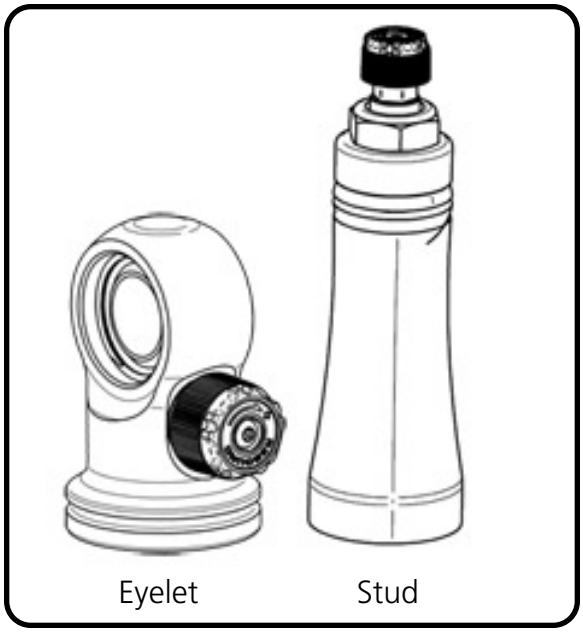

Knob Function

Counterclockwise = Softer

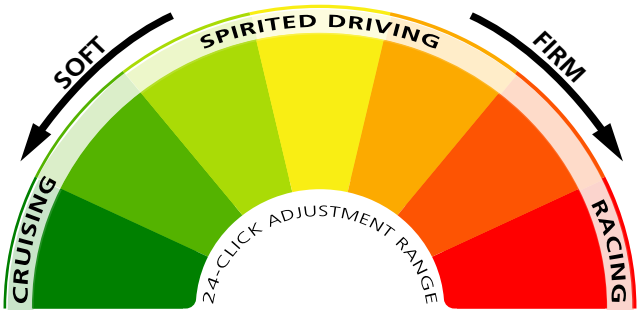

Clockwise = Firmer

TUNING GUIDE
SINGLE-ADJUSTABLE SHOCKS

Initial Rebound Setting

NOTE: Before jumping straight to a middle-of-the-road shock setting, we recommend you experience the full range of adjustment potential of your new shocks by first driving your vehicle at both the "full stiff" and "full soft" settings. Understanding how your shocks behave at these extremes will provide recognizable reference points as you attempt to dial in your settings.

1. Begin by setting your shocks to the "full stiff", or minimal rebound position. You do this by turning the adjustment knob clockwise until it stops.

2. Now turn the adjustment knob counterclockwise 12 clicks. This is the approximate center of the adjustment range.

3. Take the vehicle for a test drive. Try to determine if you are experiencing any of the unwanted behaviors found at the extremes of the adjustment range. If you are satisfied with the ride quality and handling, you're all set. Enjoy the ride!

4. If the vehicle feels too "floaty" or soft, turn the knob a few clicks clockwise to increase the damping effect.

If the ride quality is still too harsh or stiff, turn the knob a few more clicks counterclockwise to decrease the damping effect.

5. Take the vehicle for another test drive. If necessary, repeat the steps above until your desired optimal ride quality has been achieved.

General Guidelines

- The rear shocks typically have the most influence on ride quality. This is due to your seating position being closer to the rear than the front.
- Adjustments to the front shocks will generally require 3-4 clicks in any direction to be noticeable, while adjustments to the rear shocks may only require 1-2 clicks to be felt.
- Don't be afraid to turn the knobs and experience the full adjustment range. You are not going to hurt anything and you can always go back if you adjust too far one way or the other.