ridetech

Installation Instructions

Part # 11066210 - 1959-1964 GM "B" Body Rear CoilOver System

Kit Components:

11056210	Rear CoilOver Kit Includes: Rear Lower StrongArms Rear CoilOvers
11066698	Rear Upper StrongArm
11069000	Rear Adjustable Panhard Kit

Recommended Tools

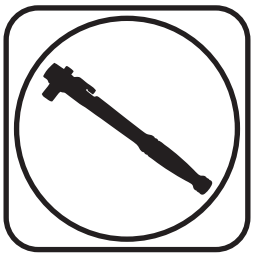

1959-1964 GM "B" Body CoilOver
Installation Instructions

Table of contents

Pages 2-8..... Lower CoilOver StrongArms
Pages 9-11..... Upper StrongArms
Pages 12-15..... Adjustable PanHard Bar
Pages 16-19..... Rear CoilOvers

Some vehicles have two factory upper arms and need a second tubular arm, Kit # 11066698.

ridetech

Installation Instructions

Part # 11056299 - 1958-1964 Full Size Chevy Rear CoilOver StrongArms

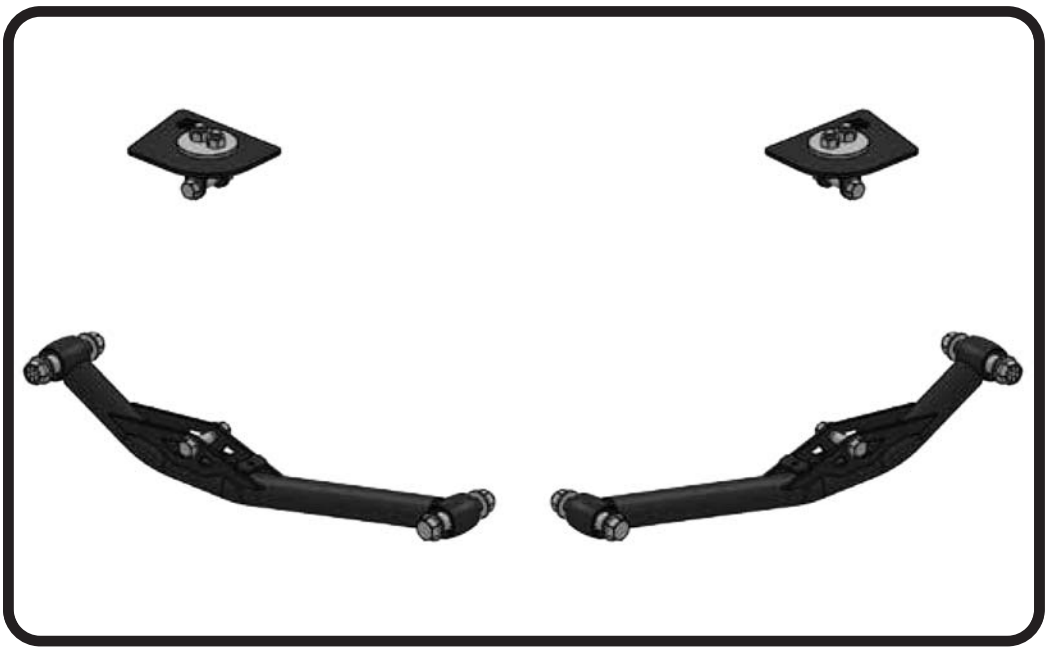

Recommended Tools

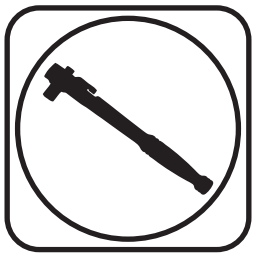

1958-1964 GM "B" Body Rear CoilOver StrongArms

Installation Instructions

Table of contents

Page 3..... Included Components
Page 4..... Hardware & Getting Started
Page 5-6..... Upper Mount Installation
Page 7..... Lower StrongArm Installation
Page 8..... Shock Installation

R-JOINT ADVANCED ROD END TECHNOLOGY ridetech

www.ridetech.com

Included Components .....In the box

Item #	Part #	Description	QTY
1	90001348	Lower Control Arms	2
2	90001349	Upper Mount base plate	2
3	90002158	Universal Shock Mounting Bracket	2
4	90001357	Upper Clamp Plate	2
5	90001350	Rear lower Control Arm "D" Bolt	2
6	70013858	R-Joint Spacers - .625" ID x 1.00"	8
R-Joint Components - (Installed in bar ends)			
7	70013279	Retaining Ring	4
8	70013280	Wavo Wave Spring	4
9	70013275	R-Joint Center Ball	4
10	70013276	R-Joint Composite Center Ball Cage	4

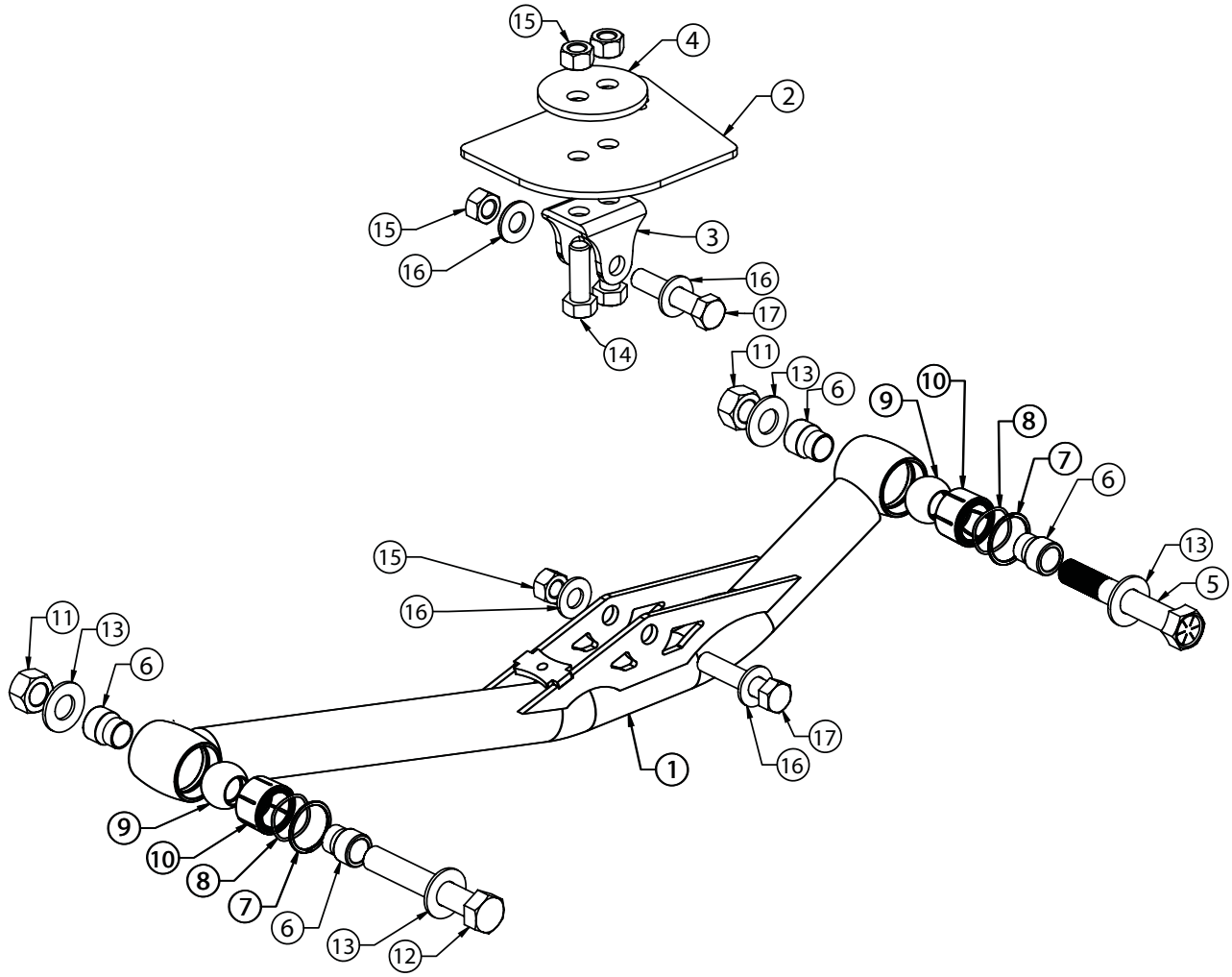

ridetech

Installation Instructions

Hardware Kit..... #99010114

Item #	QTY	Part Number	Description
	REAR UPPER CONTROL ARM		
11	4	99622001	5/8"-18 Nylok Nut
12	2	99621010	5/8"-18 x 4" Hex Bolt
13	8	99623001	5/8" SAE Flat Washer
	REAR UPPER SHOCK MOUNT		
14	4	99501053	1/2"-13 X 1 1/2" Hex Bolt
15	4	99502009	1/2"-13 Nylok Nut

Item #	QTY	Part Number	Description
	REAR COILOVER MOUNTING		
17	4	99501050	1/2"-13 X 2 1/2" Hex Bolt
15	4	99623010	1/2"-13 Nylok Nut
16	8	99561004	1/2" SAE Flat Washer
	EMERGENCY BRAKE CABLE		
Not Shown	2	99311016	5/16"-18 X 3/4" Hex Bolt
	2	99313002	5/16" SAE Flat Washer
	2	99313003	5/16" Split Lock Washer

R-JOINT SPACER INSTALLATION

Install the Spacers by inserting the SMALL side of the SPACER into the Center Pivot Ball. Push them in until they bottom out and stop.

UPPER R-JOINTS

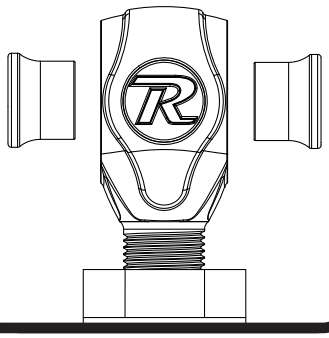

New R-Joints will be quite stiff (75-90 in/lbs breakaway torque) until they "break in" after a few miles of use. After the break in period they will move much more freely. Because the composite bearing race contains self lubricating ingredients, no additional lubrication is needed or desired. Any additional lubrication will only serve to attract more dirt and debris to the R-Joint and actually shorten its life.

Getting Started.....

Congratulations on your purchase of the Ridetech B-Body CoilOver StrongArms. These StrongArms have been designed to give your B-Body excellent handling along with a lifetime of enjoyment. Some of the key features of the StrongArm System: The StrongArms are designed to utilize a CoilOver Shock setup, R-Joints are used to eliminate bushing deflection along with providing free suspension movement through the entire travel. The R-Joints are made from a material that is self lubricating so no lubrication is needed.

Note: These control arms are designed for use with the Ridetech CoilOvers and the MuscleBar swaybar. **The factory shocks and springs will not fit these StrongArms. If you have a swaybar that attaches to the lower control arms, it will NOT work with these StrongArms.**

1. Raise the vehicle up to a comfortable work height. You will need the support the car by the frame to be able to freely raise and lower the rear axle. Use a jack under the differential to support it.

2. Remove the rear shocks, coil springs, and lower control arms. The lower shock mounts are lightly pressed into the lower control arm mount and will not turn. You will need to drive these out with a hammer. Put something over the end of the threads to keep from damaging them.

Upper Mount Installation

2. This kit contains a Upper Shock Mount setup that will require drilling to install it. **Image 2** is of the upper mount installed, we will cover the installation in the next steps. The rear of the plate will need to be aligned with the body mount that is to the rear of the coil spring mount. See the ARROW in **Image 2**.

3. The upper mount bolts into the car and will require the holes to be drilled. Start by holding the plate up in the car aligning the back edge with the body mount. Mark the holes on the frame.

4. The frames of these cars varied through the years, some have a center hole, some are solid. The frame we are doing this install on has a center hole. If the frame is solid, drill the marked holes with a 1/2" drill bit. Frames with the center hole will require a die-grinder or something similar to notch the edges of the center hole. We used a die-grinder with a burr bit to notch the holes. Repeat **Steps 2-4** on the opposite side.

Upper Mount Installation

6. The Upper Mount is attached to the frame using (2) 1/2"-13 x 1 1/2" Bolts. Insert the bolts through the shock mount and into the upper plate.

7. Position the Shock Mount/Plate up into the frame, holding the shock mount and hardware in place.

8. Install the Upper Backer plate by installing it on the 1/2" bolts that are sticking through the top side of the frame. Install a 1/2"-13 nylok nut on each of the bolts sticking through the frame and backer plate. Torque the hardware to 75 ftlbs. Repeat for the second side of the car.

Lower StrongArm Installation

9. The Lower Control Arm has the bottom CoilOver mount built in, it will need to be installed with the CoilOver mount up and to the rear of the car. Install a 5/8" ID R-joint Spacer into the front R-joint. The Small Diameter goes into the R-joint. Slide the R-joint into the OEM lower control arm mount. Align the holes in the frame with the thru-hole of the R-Joint.

NOTE: This kit contains (4) 5/8"-18 x 4" bolts, 2 of these bolts have a FLAT machined into them. The 2 bolts with the flat will be used in the REAR of the lower control arms.

10. Install a 5/8" Flat Washer on a 5/8"-18 x 4" bolt. Insert the bolt/washer into the frame/ R-Joint of the lower bar. Install a 5/8" flat washer and 5/8"-15 nylok nut on the threads of the bolt sticking through the frame. Tighten the hardware to eliminate any gaps.

11. Install the R-joint spacers into the rear R-Joints. Slide the rear of the lower control arm into the axle mount. Line up the mounting holes in the axle mount with the center hole of the R-joint. THE REAR R-JOINT REQUIRES THE 5/8"-18 x 4" BOLT WITH THE FLAT MACHINED INTO THE THREADS. Install a 5/8" flat washer on the 4" bolt with the flat. Insert the bolt/washer through the mounting hole. Align the Flat with the flat in the outer flange of the lower axle mount. Install a 5/8" flat washer and 5/8"-15 nylok nut on the threads of the bolt sticking through the frame. Tighten the hardware to eliminate any gaps

Shock Installation

12. Insert the shock bearing t-bushings into the bearing of the shock body. Insert the shock into the upper mount, lining up the holes of the mount and shock. Install a 1/2" flat washer on a 1/2"-13 x 2 1/2" bolt. Insert the bolt/washer into the upper mount/shock. Install a 1/2" flat washer and 1/2"-13 nylok nut and Torque to 50 ftlbs.

13. Insert the shock bearing t-bushings into the bearing of the shock eyelet. Insert the shock into the lower control arm, lining up the holes of the mount and shock. Install a 1/2" flat washer on a 1/2"-13 x 2 1/2" bolt. Insert the bolt/washer into the upper mount/shock. Install a 1/2" flat washer and 1/2"-13 nylok nut and Torque to 50 ftlbs.

14. Bolt the tab of the emergency brake cable to the provision in the lower control arm. This provision is built into the lower shock mount. Use the 5/16"-18 x 3/4" bolt, 5/16" split lock washer, and 5/16" flat washer to attach the cable. Torque the hardware to 12 ftlbs.

ridetech

Installation Instructions

Part # 11066698 - 1959-1964 Full Size Chevy Rear Upper StrongArm Kit

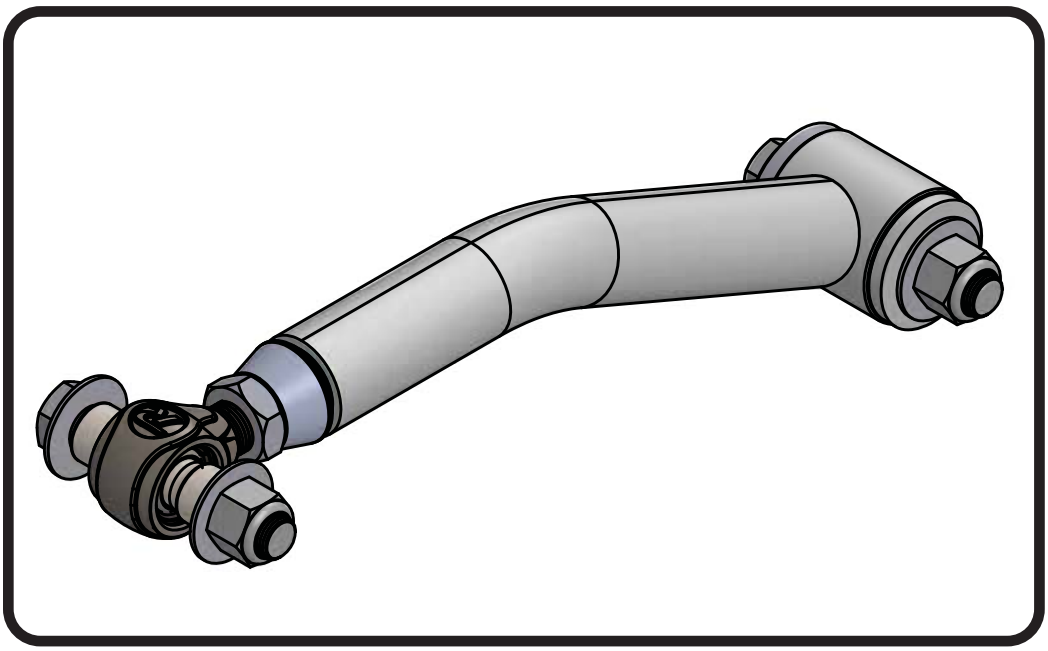

Recommended Tools

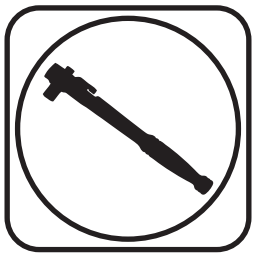

1959-1964 GM "B" Body Rear Upper StrongArms

Installation Instructions

Table of contents

Page 10..... Included Components
Page 11..... Installation

Some vehicles have two factory upper arms and need a second tubular arm, Kit # 11066698.

R-JOINT ADVANCED ROD END TECHNOLOGY ridetech

www.ridetech.com

REV1 6/1/23

Included Components .....In the box

Item #	Part #	Description	QTY
1	90001119	Upper Control Arm - set to 13.750"	1
2	90001318	R-Joint End	1
3	70013858	R-Joint Spacers	2
4	90001086	Poly Bushing Half	2
5	90000467	Inner Bushing Sleeve - 2.5" Long	1
6	99752004	3/4"-16 Jam Nut	1

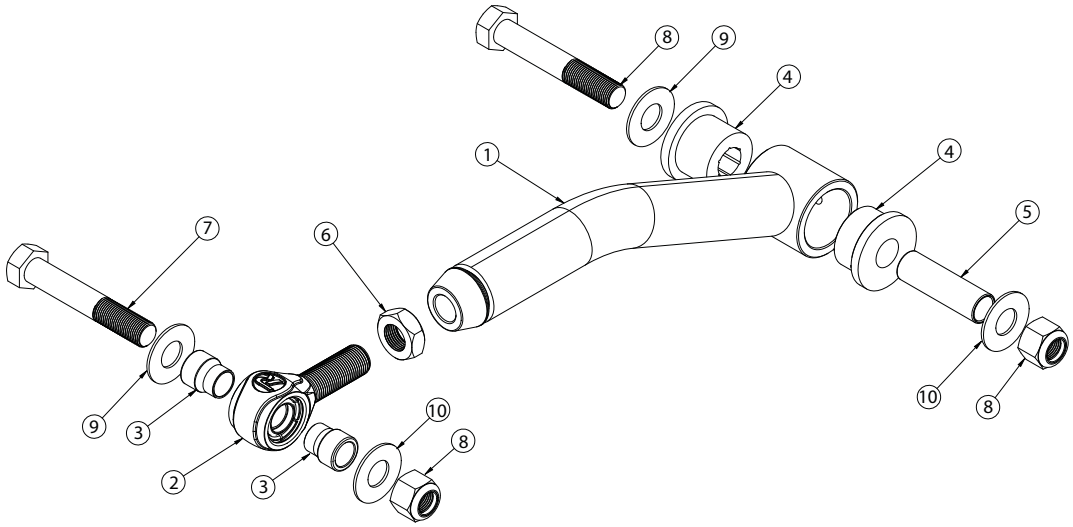

Hardware List .....In the box (Kit# 99010107)

Item #	QTY	Part Number	Description
7	2	99621006	5/8"-18 x 3 3/4" Bolt
8	2	99622006	5/8"-18 Nylok Nut
9	4	99623001	5/8" SAE Flat Washer

R-JOINT SPACER INSTALLATION

Install the Spacers by inserting the SMALL side of the SPACER into the Center Pivot Ball. Push them in until they bottom out and stop.

UPPER R-JOINTS

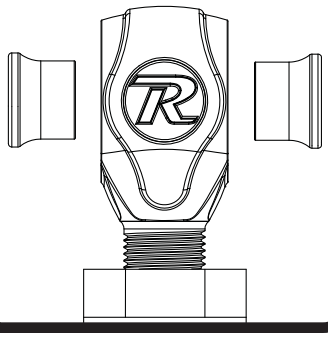

New R-Joints will be quite stiff (75-90 in/lbs breakaway torque) until they "break in" after a few miles of use. After the break in period they will move much more freely. Because the composite bearing race contains self lubricating ingredients, no additional lubrication is needed or desired. Any additional lubrication will only serve to attract more dirt and debris to the R-Joint and actually shorten its life.

Upper Bar Installation

1. Insert the Bushing end of the Upper Control Arm into the OEM mount. The control arm should be installed with the bend upward for better axle clearance. Install a 5/8" flat washer on a 5/8"-18 x 3 3/4" hex bolt through the mount and control arm bushing. Install a 5/8" flat washer, followed by a 5/8"-18 nylok jam nut onto the threads of the bolt. Tighten the hardware enough to eliminate any gaps.

2. Insert the small diameter of the R-Joint Spacers into the center ball of the R-Joint. Insert the R-Joint/Spacers into the OEM mount of the differential.

3. Install a 5/8" flat washer on a 5/8"-18 x 3 3/4" hex bolt through the mount and control arm R-Joint. Install a 5/8" flat washer, followed by a 5/8"-18 nylok jam nut onto the threads of the bolt. Tighten the hardware enough to eliminate any gaps.

ridetech

Installation Instructions

Part # 11069000 - 1959-1964 Full Size Chevy Adjustable Panhard Kit

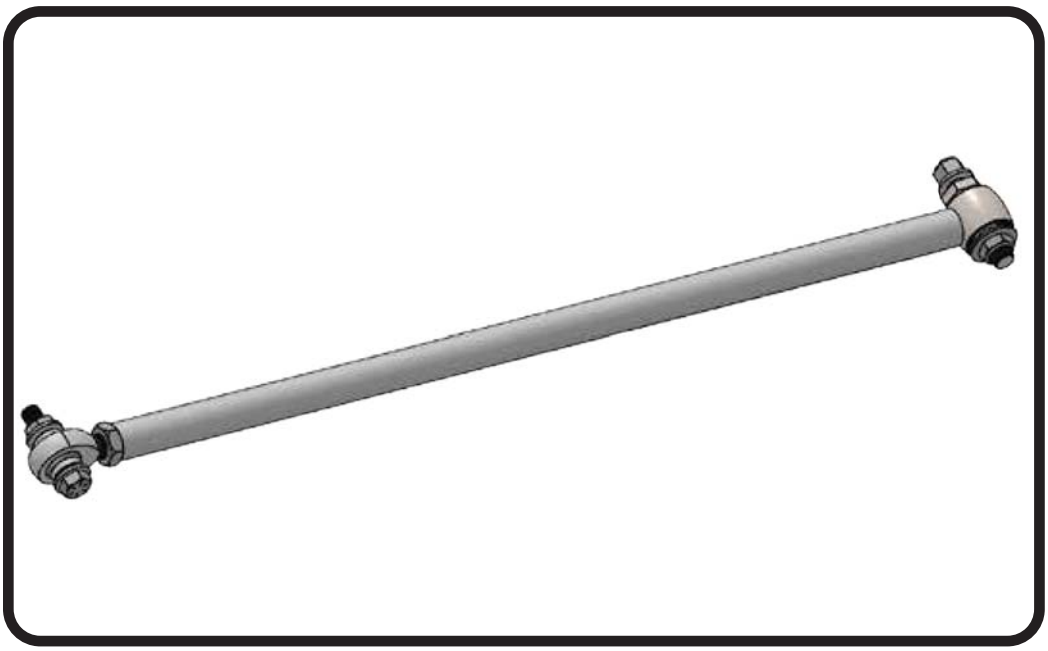

Recommended Tools

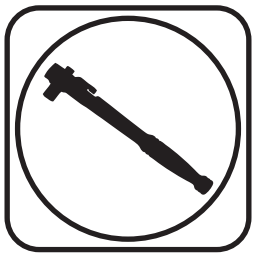

1959-1964 GM "B" Body Adjustable Panhard Kit

Installation Instructions

Table of contents

Page 13..... Included Components & Hardware
Page 14-15..... Installation

R-JOINT ADVANCED ROD END TECHNOLOGY

www.ridetech.com

REV2 6/4/20

Included Components .....In the box

Item #	Part #	Description	QTY
1	90002849	Panhard Bar - set to 31.500"	1
2	90000461	Panhard Stud	1
3	70013334	R-Joint Spacers	2
4	90001946	3/4" ID Heim	1
5	99752004	3/4"-16 Jam Nut	1
6	90000460	Heim T-Bushings	2
R-Joint Components - (Installed in bar ends)			
7	70013279	Retaining Ring	1
8	70013280	Wavo Wave Spring	1
9	70013275	R-Joint Center Ball	1
10	70013276	R-Joint Composite Center Ball Cage	1

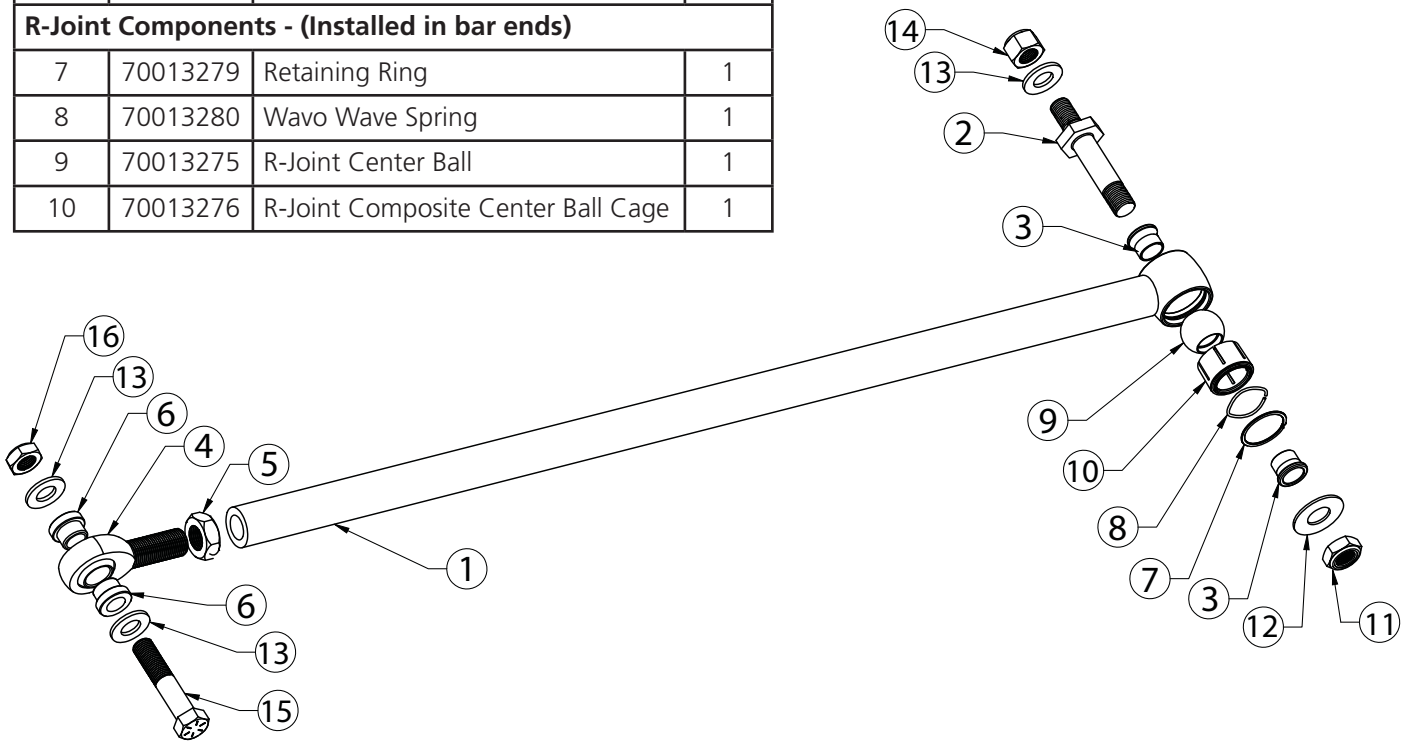

Hardware List .....In the box (Kit# 99010122)

Item #	QTY	Part Number	Description
PANHARD BAR STUD			
11	1	99622006	5/8"-18 Nylok Jam Nut
12	1	99623001	5/8" SAE Flat Washer
13	1	99566003	9/16" SAE Flat Washer
14	1	99562001	9/16"-18 Nylok Nut
PANHARD BAR FRAME MOUNT			
13	2	99566003	9/16" SAE Flat Washer
15	1	99561007	9/16"-18 x 2 3/4" Bolt
16	1	99562003	9/16"-18 Nylok Jam Nut

R-Joint Spacer Installation

R-JOINT SPACER INSTALLATION

Install the Spacers by inserting the SMALL side of the SPACER into the Center Pivot Ball. Push them in until they bottom out and stop.

UPPER R-JOINTS

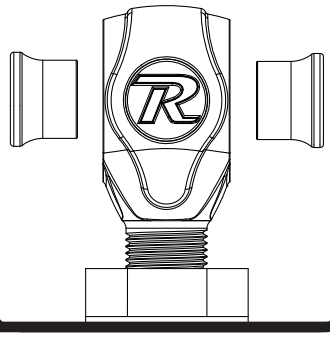

New R-Joints will be quite stiff (75-90 in/lbs breakaway torque) until they "break in" after a few miles of use. After the break in period they will move much more freely. Because the composite bearing race contains self lubricating ingredients, no additional lubrication is needed or desired. Any additional lubrication will only serve to attract more dirt and debris to the R-Joint and actually shorten its life.

The Panhard bar can be removed from the car with it sitting at any height, but the car will need to be at ride height when checking the sided to side deminsions. It may be necessary to adjust the panhard bar to center the differential in the car at ride height.

1. Remove the OEM panhard bar from the car.

2. Remove the panhard bar stud from the rear differential.

Panhard Bar Installation

1. Bolt the new panhard bar stud into the OEM location of the axle using the 9/16" flat washer and 9/16"-18 Nylok nut supplied in the kit. Torque to 95 ftlbs.

Panhard Bar Installation

2. Install a Narrow 5/8" ID R-joint Spacer into the R-joint. The Small Diameter goes into the R-joint. Slide the R-joint onto the stud and fasten in place with a 5/8" flat washer and 5/8"-18 thin jam nylok nut. Torque to 95 ftlbs.

3. Install the ¾" jam nut onto the end of the Heim end, then screw Heim end into the end of the panhard bar. Set the Panhard Bar to 31.500". You may need to readjust it after getting the car set at ride height, but this is a good starting point. Press the SMALL diameter of the aluminum 9/16" ID T-bushings into the Heim end.

4. Insert the heim end of the panhard bar into the OEM frame mount. Align the align hole in the heim end with the holes in the OEM mount. Install a 9/16" flat washer on a 9/16"-18 x 2 3/4" hex bolt and insert in into the aligned holes. Install a 2nd 9/16" washer followed by a 9/16"-18 nylok nut on the threads of the bolt sticking through the frame. Torque to 95 ftlbs.

5. Check the side to side dimension between the tire and quarter panel with the car at ride height. You may need to adjust the panhard bar to center the axle at ride height.

ridetech

Installation Instructions

Part # 11066210 - 1959-1964 B-Body Rear CoilOvers

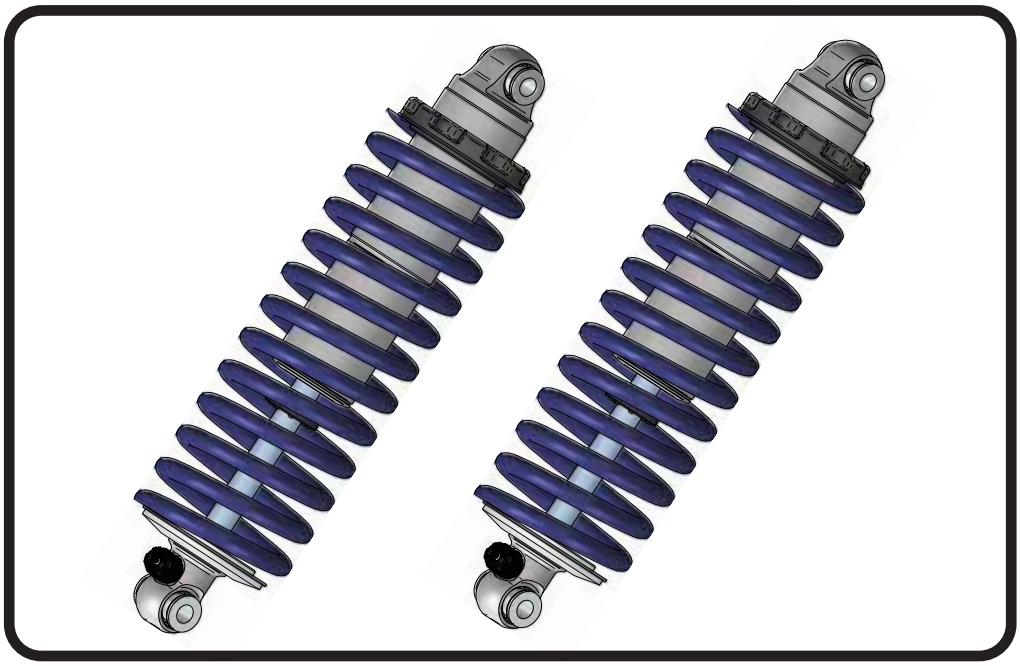

Recommended Tools

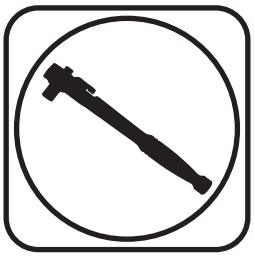

1959-1964 B-Body HQ Series Rear Coilovers

Installation Instructions

Table of contents

Page 17..... Included components
Page 18..... Assembly and Adjusting
Page 19..... Final Adjusting and Preloading the Spring

Coilover Dimensions:

Center of bearing to Center of bearing:

Compressed:	9.43”
Ride Height:	11.50”
Extended:	13.03”

www.ridetech.com

Major Components .....In the box

Item #	Part #	Description	QTY
1	982-10-803	3.6" Stroke HQ Series Shock	2
2	815-05-022-KIT	1.7" Shock Eyelet	2
4	59080575	Coilspring 8" 575lb	2
5	70010828	Delrin Spring Washer	4
6	803-00-199(kit)	Lower Spring Adjuster Nut (803-00-199 kit)	2
7	803-00-199(kit)	Adjuster Nut Locking Screw (803-00-199 kit)	2
8	803-00-199(kit)	Retaining Ring (803-00-199 kit)	2
9	90002043	Shock Bearing Spacers	8
	90001994	5/8" ID Bearing (installed in shock and eyelet)	4
	90001995	Bearing Snap Ring (installed in shock and eyelet)	8

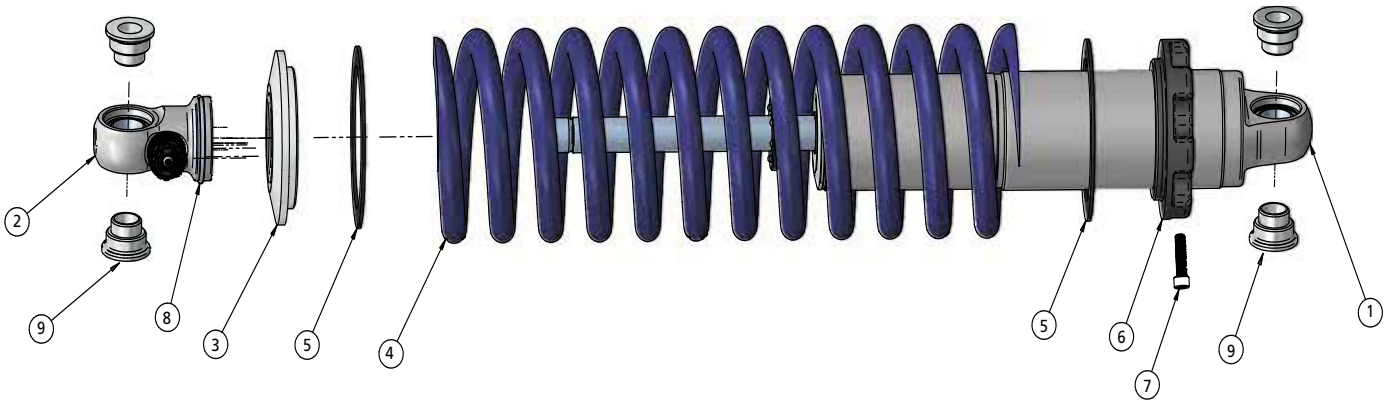

CoilOver Assembly...

First, using the supplied lower adjuster nut (803-00-199) thread the nut onto the shock from the bottom side as seen in figure 1. Remove the plastic pellet that is in the split of the adjuster nut.

Next, install a delrin washer then coil spring over the top of the shock as seen in figure 2.

Before the upper spring mount can be installed screw the adjuster knob on the upper eye mount to the firmest setting (clockwise) as seen in figure 3. Then remove the Knob by holding it while removing the center screw.

Once the knob is removed slide a Delrin washer over the eyelet. Next, slide the upper spring mount (803-00-199) over eyelet as seen in figure 4.

Install upper spring mount retainer clip (803-00-199) into the groove on the upper eyelet as seen in figure 5. Then, reinstall adjuster to complete assembly.

Install the locking screw in the adjuster nut before setting spring preload, but DO NOT tighten until the spring preload has been set.

NOTE: Remember to adjust the shock valving before driving, the shock is currently set to full stiff.

Shock Adjustment 101- Single Adjustable

Rebound Adjustment:
How to adjust your new shocks.
The rebound adjustment knob is located on the top of the shock absorber protruding from the eyelet.
You must first begin at the ZERO setting, then set the shock to a medium setting of 12.

-Begin with the shocks adjusted to the ZERO rebound position (full stiff). Do this by rotating the rebound adjuster knob clockwise until it stops.

-Now turn the rebound adjuster knob counter clock wise 12 clicks. This sets the shock at 12. (settings 21-24 are typically too soft for street use).

Take the vehicle for a test drive.

-if you are satisfied with the ride quality, do not do anything, you are set!

-if the ride quality is too soft increase the damping effect by rotating the rebound knob clock wise 3 clicks.

Take the vehicle for another test drive.

-if the vehicle is too soft increase the damping effect by rotating the rebound knob clock wise 3 additional clicks.

-If the vehicle is too stiff rotate the rebound adjustment knob counter clock wise 2 clicks and you are set!

Take the vehicle for another test drive and repeat the above steps until the ride quality is satisfactory.

Note:
One end of the vehicle will likely reach the desired setting before the other end. If this happens stop adjusting the satisfied end and keep adjusting the unsatisfied end until the overall ride quality is satisfactory.

Final Tightening and Adjusting

Ride Height

We have designed most cars to have a ride height of about 2" lower than factory. To achieve the best ride quality & handling, the shock absorber needs to be at 40-60% overall travel when the car is at ride height. This will ensure that the shock will not bottom out or top out over even the largest bumps. Measuring the shock can be difficult, especially on some front suspensions. Measuring overall wheel travel is just as effective and can be much easier. Most cars will have 4-6" of overall wheel travel. One easy way to determine where you are at in wheel travel is to take a measurement from the fender lip (center of the wheel) to the ground. Then lift the car by the frame until the wheel is just touching the ground, re-measure. This will indicate how far you are from full extension of the shock. A minimum of 1.5" of extension travel (at the wheel) is needed to ensure that the shock does not top out. If you are more than 3" from full extension of the shock then you are in danger of bottoming out the shock absorber.

Adjusting Spring Height

When assembling the CoilOver, screw the spring retainer tight up to the spring (0 preload). After entire weight of car is on the wheels, jounce the suspension and roll the car forward and backward to alleviate suspension bind.

- If the car is too high w/ 0 preload then a smaller rate spring is required. Although threading the spring retainer down would lower the car, this could allow the spring to fall out of its seat when lifting the car by the frame.

- If the car is too low w/ 0 preload, then preload can then be added by threading the spring retainer up to achieve ride height. On 2.6" - 4" stroke shocks, up to 1.5" of preload is acceptable. On 5-7" stroke shocks, up to 2.5" of preload is acceptable. If more preload is needed to achieve ride height a stiffer spring rate is required. Too much preload may lead to coil bind, causing ride quality to suffer.