ridetech

Installation Instructions

Part # 11040202 - 1958 Chevrolet "B" Body CoilOver System

Front Components:

11053510	Front CoilOver Instructions
11052899	Front Lower StrongArms
11053699	Front Upper StrongArms
11059120	Front SwayBar Instructions

Rear Components:

11056210	Rear CoilOver Kit Includes: Rear Lower StrongArms Rear CoilOvers
11046699	Rear Upper StrongArms

Miscellaneous Components:

85000000	Spanner Wrench

Recommended Tools

1958 Chevrolet "B" Body CoilOver
Installation Instructions

Table of contents

Pages 2-6..... Front CoilOvers
Pages 7-15..... Front StrongArms
Pages 16-19..... Front SwayBar
Pages 20-33..... Rear CoilOver Kit
Pages 34-40..... Rear SwayBar

THESE CONTROL ARMS ARE DESIGNED TO BE USED WITH THE 1959-1964 OEM SPINDLES.

ridetech

Installation Instructions

Part # 11053510 - 1958-1964 GM "B" Body HQ Front CoilOvers

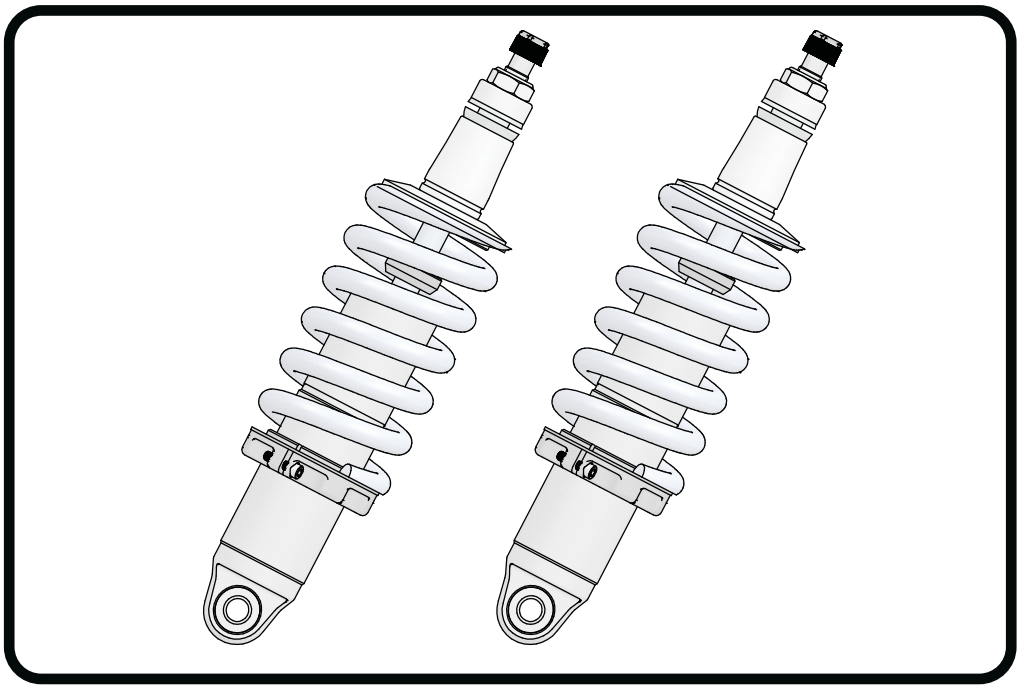

Recommended Tools

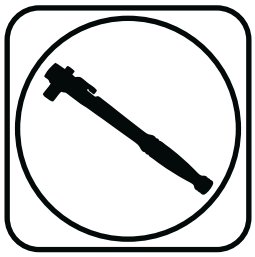

1958-1964 GM "B" Body HQ Series Front CoilOvers

Installation Instructions

Table of contents

Page 3..... Included Components
Page 4..... CoilOver Assembly
Page 5-6..... CoilOver Installation

Coilover Dimensions:

Center of bearing to Stud Mounting Surface:

Compressed:	10.48"
Ride Height:	12.55"
Extended:	14.08"

www.ridetech.com

Major Components .....In the box

Item #	Part #	Description	QTY
1	982-10-803	3.6" Stroke HQ Series Shock	2
2	59080750	Coilspring 8" 750lb	2
3	70010828	Delrin Spring Washer	4
4	803-00-199(kit)	Lower Spring Adjuster Nut (803-00-199 kit)	2
5	803-00-199(kit)	Adjuster Nut Locking Screw (803-00-199 kit)	2
6	803-00-199(kit)	Upper CoilSpring Retaining Plate	2
7	803-00-199(kit)	CoilSpring Plate Retaining Ring	2
8	90009989(kit)	2.75" Stud Adjuster Assembly	2
9	90002313	2.75" Stud Top Base	2
10	90001904	Delrin Ball Lower Half	2
11	90001903	Delrin Ball Top Half	2
12	90001902	Delrin Ball Upper Cap	2
13	99562003	9/16-18" Nylok Nut	2
14	210-35-120-0	Shock Adjuster Knob	2
15	90009969	Adjuster Knob Retaining Screw	2
	90001994	5/8" ID Bearing (installed in shock body)	2
	90001995	Bearing Snap Ring (installed in shock body)	4

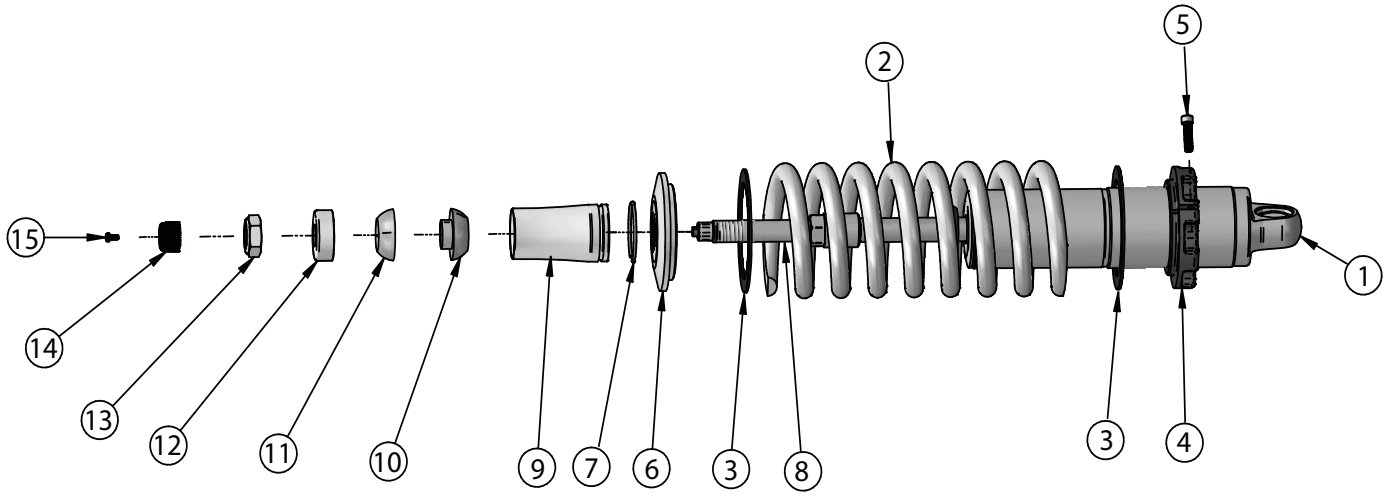

BEARING SPACERS (90002062) ARE INCLUDED WITH THE FRONT LOWER CONTROL ARMS

CoilOver Assembly

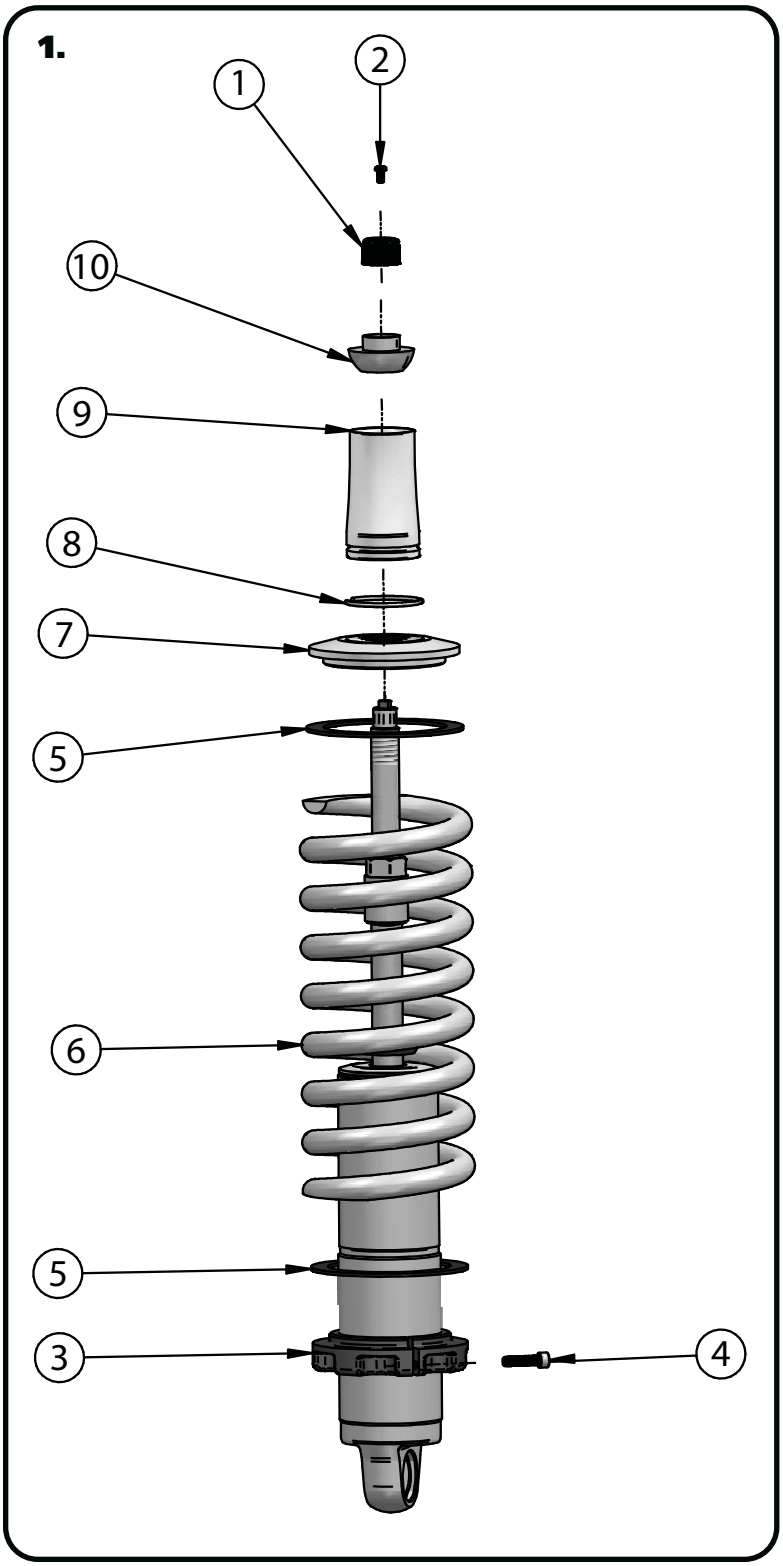

1. To Assemble the CoilOver you need to:

a. Remove Screw (2) from center of Adjustment Knob (1) and remove Adjustment Knob.

b. Remove Nylok Nut, Delrin Upper Cap, Delrin Upper and Lower Balls, along with the base from the Coliover stud.

c. Thread Adjuster Nut (3) onto the CoilOver body. Once it is threaded on the shock body, lightly thread in the locking screw (4) into the Adjuster Nut.

d. Install a Delrin Spring Washer (5) onto the Adjuster Nut.

e. Slide the CoilSpring (6) onto the CoilOver.

f. Install another Delrin Spring Washer (5) on top of the CoilSpring.

g. Install the Upper CoilSpring Plate (7) onto the CoilSpring.

h. Install the CoilSpring Retaining Ring (8) onto the Stud Top Base (9). It fits into the groove in the base.

i. Slide the Stud Top Base onto the shock until it bottoms out on the stud. It may be necessary to thread the Adjuster Nut down the shock body (to lower the spring) if the base will not slide all the way down onto the stud.

k. Slide the Lower Delrin Ball (10) (it has the collar sticking up around the center hole) on to the Stud Top.

Repeat on second CoilOver.

CoilOver Installation

1. Drill the OEM shock hole out to 3/4". This can be done with a Unibit.

2. The CoilOver stud top will come in contact with the coil spring retainer, so it must be opened up towards the engine. **Image 2** has a white line illustrating where to cut the opening for stud top clearance. A die grinder works well here.

3. Image 3 shows the spring retainer trimmed out.

Note: It may be helpful to go ahead and install the lower StrongArms and CoilOvers to check if any more trimming is necessary.

CoilOver Installation

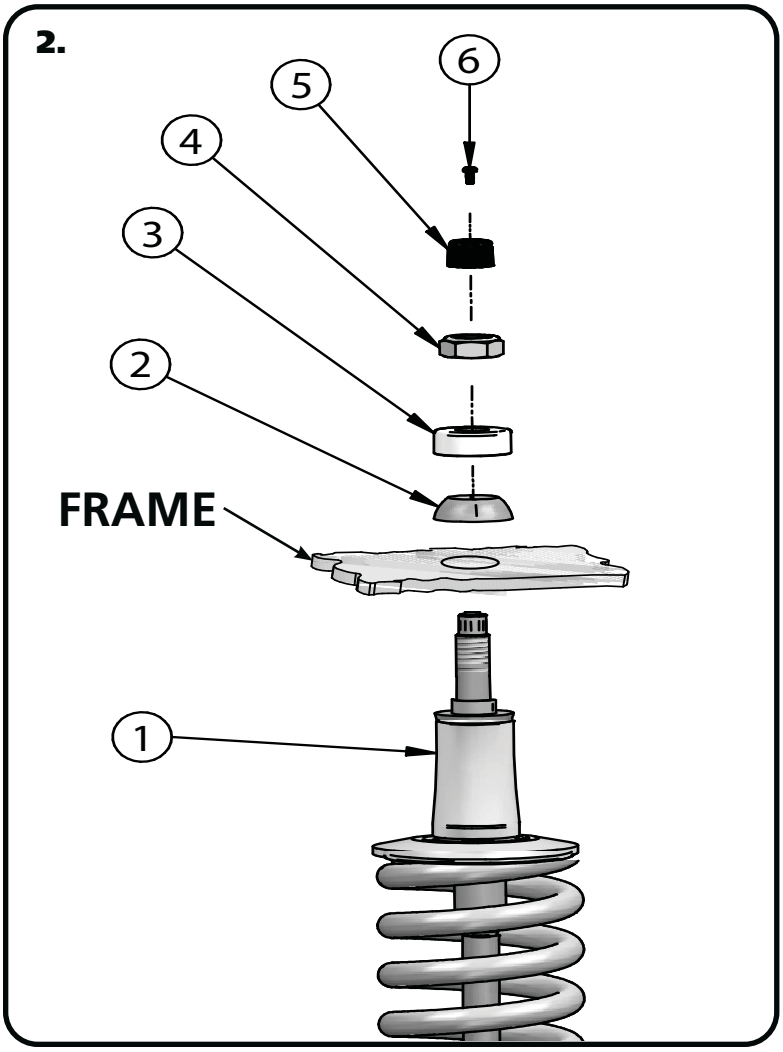

2. With the CoilOver(1) assembled, it is time to bolt them into the car. **The factory shock hole will need to be drilled out to 3/4", this can best be done using a Unibit.** Insert to CoilOver Stud Top through the factory hole in the frame. Install the Upper Delrin Ball(2) onto the shock stud with the flat side facing the frame. Next, Install the Delrin Ball cap (3) onto the shock stud with the Concave side facing the Upper Delrin ball. Install the Nylok Nut(3) onto the shock stud and lightly tighten. The needs to be some resistance on the ball but not tight enough that it will not rotate freely. Reinstall the adjuster knob(5) using the screw (6) that was removed during step 1.

TIGHTENING THE TOP 9/16"-18 NUT: SNUG THE NUT DOWN AGAINST THE TOP CAP. YOU NEED TO BE ABLE TO ARTICULATE THE SHOCK BY HAND. WE TORQUE THE NUT TO 80 INLBS USING A 7/8" CROWS FOOT WRENCH ON A TORQUE WRENCH.

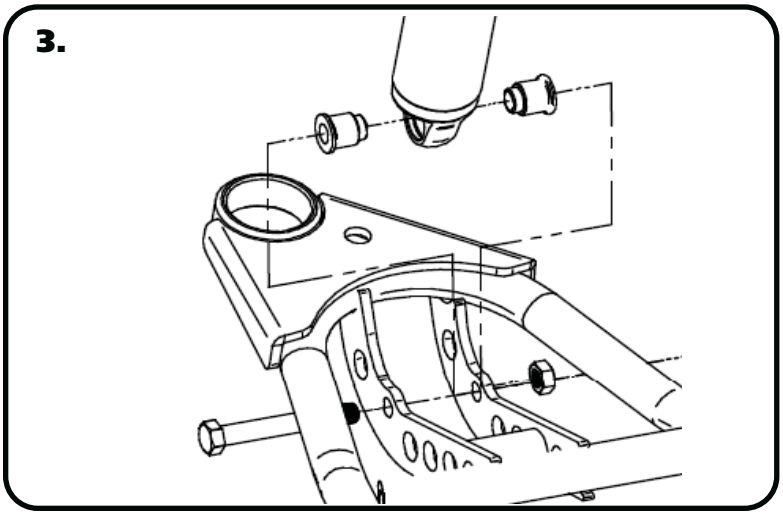

3. Install a spacer on each side of the lower Coilover. Slide the shock with the spacers installed into the lower control arm. Raise the arm up to line up the holes in the bushing with the 1/2" hole in the control arm straps and hold it in place while you install the 1/2" x 3 1/2" bolt, 1/2" flat washer, and 1/2" Nylok nut. Tighten the upper and lower shock bolts.

ridetech

Installation Instructions

Part # 11052899

1958-1964 GM B-Body Front Lower ShockWave/CoilOver StrongArms

Recommended Tools

1958-1964 GM B-Body Lower StrongArms

Installation Instructions

Table of contents

Page 7..... Lower Control Arm Components
Page 8..... Hardware List & Getting Started
Page 9..... Control Arm Installation
Page 10..... Installing Spindle and Alignment

THESE CONTROL ARMS ARE DESIGNED TO BE USED WITH THE 1959-1964 OEM SPINDLES.

Upper Control Arm Components .....In the box

Item #	Part Number	Description	QTY
1	90001298	Driver Lower Control Arm **(Shown)**	1
1	90001299	Passenger Lower Control Arm	1
2	90002586	Lower Ball Joint Kit - only available through Ridetech	2
3	90000676	Lower Cross Shaft	2
4	90000677	Lower Cross Shaft Clamp	2
5	90001442	Delrin Bushings	4
6	90001289	Bushing Inner Sleeve	4
7	99250001	Grease Zerk	2
8	90002062	Shock Bearing Spacers	4
9	70014361	Steering Stop - Driver **(Shown)**	1
9	70014362	Steering Stop - Passenger	1

HARDWARE LIST IS ON PAGE 3

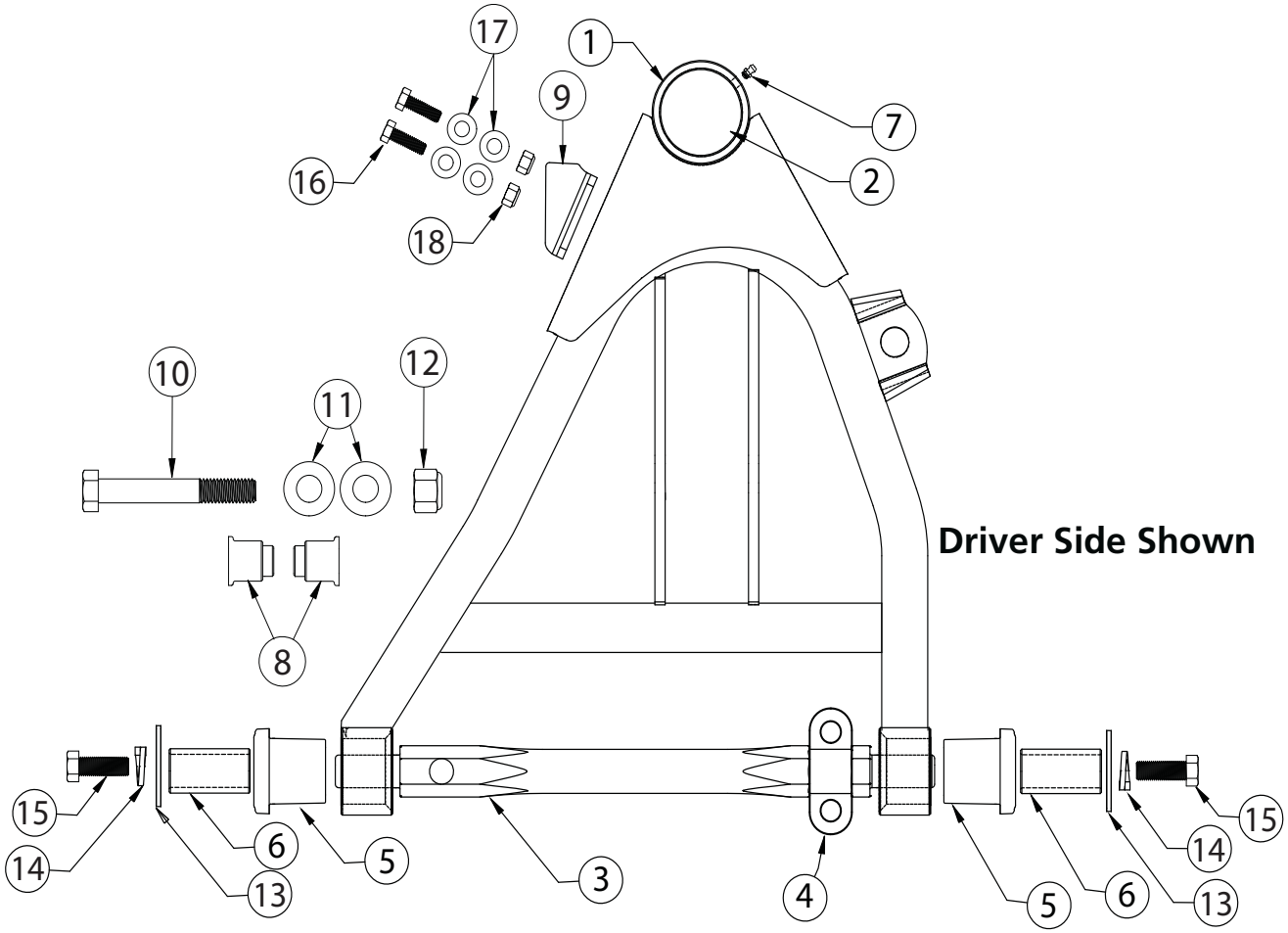

Hardware List .....In the box (Kit# 99010078)

The Hardware Kit contains bags to help aid in selecting the correct hardware for the component being installed. The hardware list shows how the hardware is bagged.

Item #	QTY	Part Number	Description	Use
SHOCK TO CONTROL ARM				
10	2	99501005	1/2"-13 x 3 1/2" Hex Bolt	Shock to Control Arm
11	4	99503014	1/2" SAE Flat Washer	Shock to Control Arm
12	2	99502009	1/2"-13 Nylok Nut	Shock to Control Arm
CONTROL ARM BUSHING HARDWARE				
13	4	99433001	7/16" Flat Washer	Control Arm Bushing Hardware
14	4	99433003	7/16" Split Lock Washer	Control Arm Bushing Hardware
15	4	99431006	7/16"-20 x 1 1/4" Hex Bolt	Control Arm Bushing Hardware
STEERING STOP TO CONTROL ARM				
16	4	99311030	5/16"-18 x 1" Hex Bolt	Steering Stop to Control Arm
17	8	99313001	5/16" Flat Washer	Steering Stop to Control Arm
18	4	99312003	5/16"-18 Nylok Nut	Steering Stop to Control Arm
THE FOLLOWING HARDWARE IS NOT SHOWN IN THE DIAGRAM				
CROSS SHAFT TO FRAME				
	4	99431015	7/16"-20 x 2 1/4" Hex Bolt	Cross Shaft Clamp to Frame
	4	99433003	7/16" Split Lock Washer	Cross Shaft Clamp to Frame
	2	99561001	9/16"-18 x 2 1/2" Hex Bolt	Cross Shaft to Frame
	2	99566003	9/16" SAE Flat Washer	Cross Shaft to Frame
	2	99562001	9/16"-18 Nylok Nut	Cross Shaft to Frame

Getting Started.....

Congratulations on your purchase of the Ridetech 58-64 B-Body StrongArms. These StrongArms have been designed to give your B-Body excellent handling along with a lifetime of enjoyment. Some of the key features of the StrongArms: Ball joint angles have been optimized for the lowered ride height, Delrin bushings are used to eliminate bushing deflection along with providing free suspension movement through the entire travel. The Delrin bushings are made from a material that is self lubricating so no grease zerks are needed.

1. Remove the lower control arms from the car. If you are replacing the upper control arms and spindle, remove them too. Refer to a Factory Service Manual for the proper method.

Installation

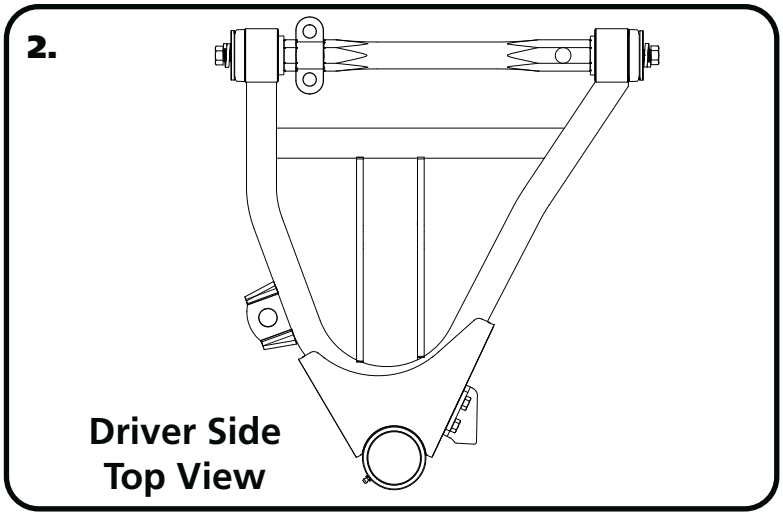

2. The Lower Control Arm is attaching the frame using the included hardware. The driver side arm is shown in **Figure "2"**. The sway bar mount is located to the front of the car.

Install the ShockWaves/CoilOvers at this time. Refer to the ShockWaves/ CoilOvers instructions for Assembly.

3. The Aluminum Clamp is installed in the notch machined in the lower cross shaft. Install a 7/16" Split Lock Washer on each of (2) 7/16"-20 x 2" Hex Bolts. Install a 9/16" Flat Washer on a 9/16"-18 x 2 1/2" Hex Bolt. Hold the control arm in-place with the holes aligned with the holes in the frame. Insert the 7/16" bolts in the holes of the cross shaft clamp and thread them into the OEM nut plate that is in the frame. Insert the 9/16" bolt/washer in the rear hole of the cross shaft and through the frame. Install a 9/16"-18 Nylok Nut on the threads of the bolt that are sticking through the frame. Torque the 7/16" hardware to 55 ftlbs. Torque the 9/16" hardware to 120 ftlbs.

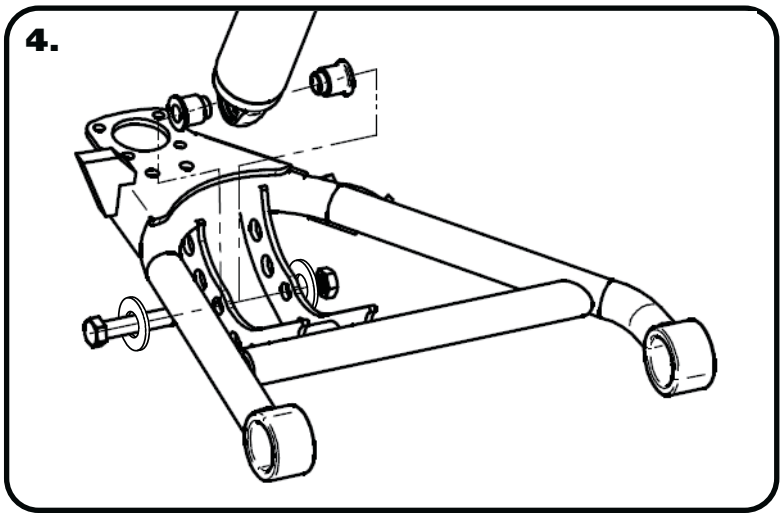

4. Bolt the Shockwave or CoilOver to the lower arm using the supplied 1/2" x 3 1/2" bolt, 1/2" flat washers, and 1/2" nylok nut. Insert the supplied aluminum spacers in each side of the shock bearing and slip it into the control arm. Line the spacers/bearing up with the 1/2" hole in the shock straps of the control arm and install hardware. Torque the 1/2" hardware to 75 ftlbs.

Installing Spindle and Alignment

5. Attach the Spindle to the control arms. These control arms use a tall ball joint, the boot will NOT touch the spindle. This is normal.

Torque Specs:
Ball joint - 45 ftlbs and tighten to line up cotter pin.

Install the Cotter Pin after tightening the ball joint nut.

6. Attach the adjustable steering stop to the lower arm using (2) 5/16" x 1" bolts, (4) 5/16" flat washers, & (2) 5/16"-18 nylok nuts.. This can be adjusted to maintain tire/shock clearances. Torque the steering stop hardware to 25 ftlbs.

7. Tighten all fasteners and grease the ball joints. Connect the sway bar linkage to the new StrongArms. If you are going to install the Ridetech MuscleBar, now is a good time to do it.

Suggested Alignment Specs:

Camber:	Street:	-.5 degrees
Caster:	Street:	+3.0 to + 5.0 degrees
Toe:	Street:	1/16" to 1/8" toe in

ridetech

Installation Instructions

Part # 11053699 - 1958-1964 GM B-Body Front Upper StrongArms

Recommended Tools

1958-1964 GM B-Body Upper StrongArms

Installation Instructions

Table of contents

Page 12..... Upper Control Arm Components
Page 13..... Getting Started & Installation
Page 14..... Installing Spindle and Alignment

THESE CONTROL ARMS ARE DESIGNED TO BE USED WITH THE 1959-1964 OEM SPINDLES.

www.ridetech.com

Upper Control Arm Components .....In the box

Item #	Part Number	Description	QTY
1	90001296	Driver Upper Control Arm **(Shown)**	1
1	90001297	Passenger Upper Control Arm	1
2	90000905 kit	Upper Ball Joint Kit - Proforged # 101-10038	2
3	90000927	Cross Shaft Kit - contains 2 cross shafts	2
4	90001442	Delrin Bushing	4
5	90001290	Delrin Bushing Inner Sleeve	4
6	99373001	Outer Washer - Cross Shaft	4
7	99373005	3/8" Split Lock Washer -Cross Shaft	4
8	99371014	3/8"-24 x 1 1/4" Hex Bolt - Cross Shaft	4

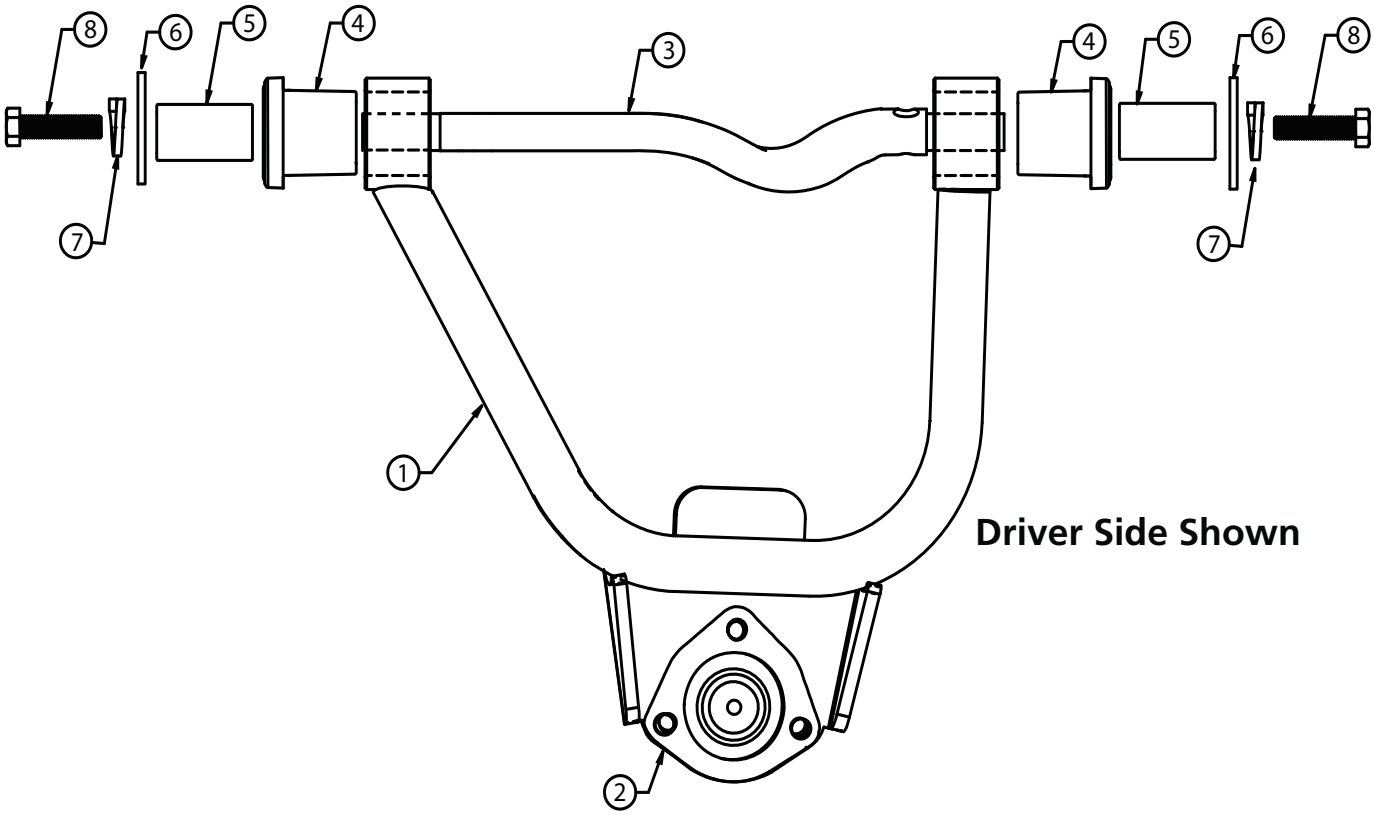

Getting Started.....

Congratulations on your purchase of the Ridetech StrongArms. These StrongArms have been designed to give your car excellent handling along with a lifetime of enjoyment. Some of the key features of the StrongArms: Ball joint angles have been optimized for the lowered ride height, Delrin bushings are used to eliminate bushing deflection along with providing free suspension movement through the entire travel. The Delrin bushings are made from a material that is self lubricating so no grease zerks are needed.

Installation

1. Remove the upper control arms from the car. Keep the shims separate so that you can put them back in the location they were removed from. If you are replacing the lower control arms and spindle, remove them too. Refer to a Factory Service Manual for the proper method.

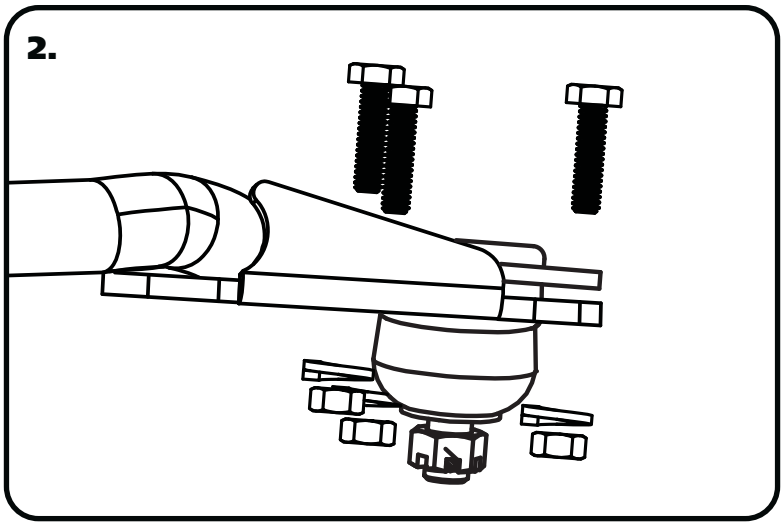

2. Insert the Ball Joint into the Control Arm from the TOP side with the Stud pointing downward. Insert the supplied Bolts from the top side. Install a Lock Washer and Hex Nut on the threads of each bolt. Torque the hardware to 25 ftlbs.

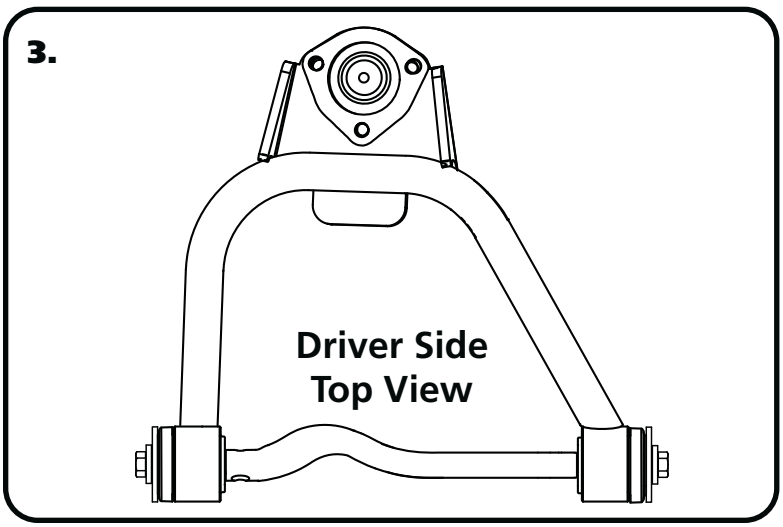

3. The Upper Control Arm is attached to the factory frame using factory hardware. The driver side arm is shown in **Figure "3"**. The Ball joint is located on the arm to the REAR of the car.

Installing Spindle and Alignment

4. The Upper Control Arm is attaching the factory mount using factory hardware. Reinstall the shims in the location they were removed from. The passenger side arm is shown in **Figure "4"**. Torque the OEM nuts to 50 ft-lbs.

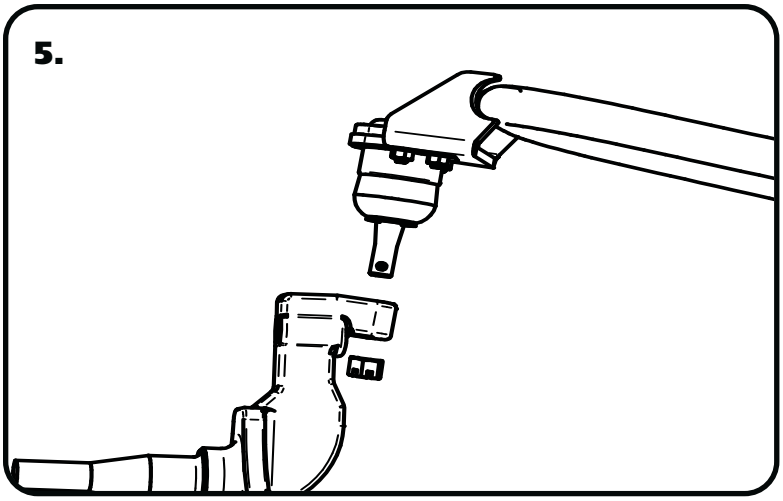

5. Attach the Spindle to the control arms. These control arms use a tall ball joint, the boot will NOT touch the spindle. This is normal.

Torque Specs:
Ball joint - 45 ftlbs and tighten to line up cotter pin.

Install the Cotter Pin after tightening the ball joint nut.

6. Tighten all fasteners.

Suggested Alignment Specs:

Camber:	Street:	-.5 degrees
Caster:	Street:	+3.0 to + 5.0 degrees
Toe:	Street:	1/16" to 1/8" toe in

ridetech

Installation Instructions

Part # 11059120 - 1958-1964 Chevrolet B-Body Front SwayBar

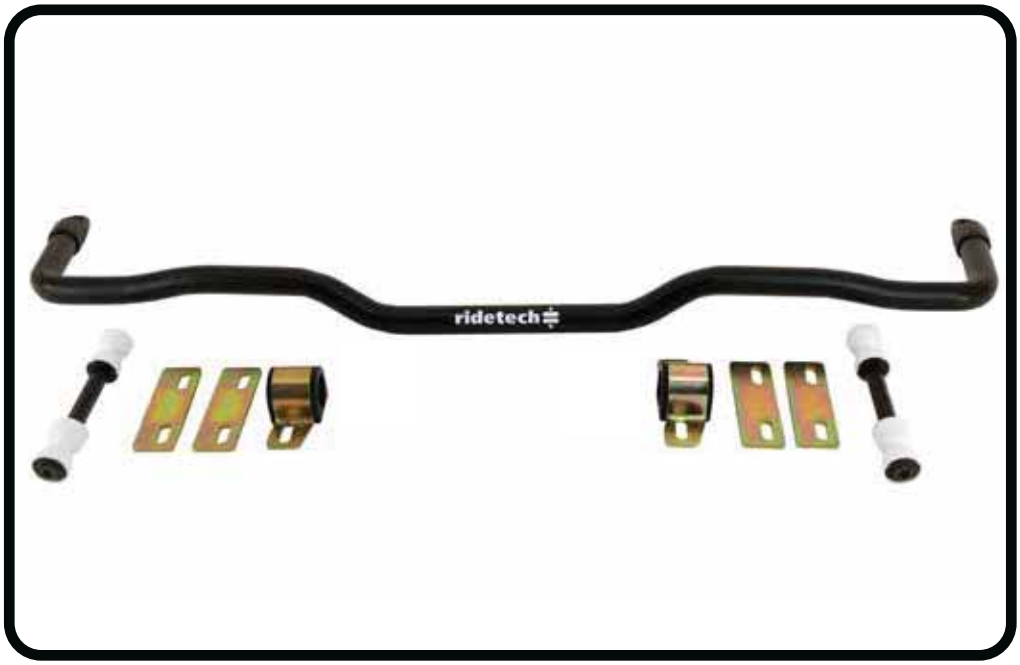

Recommended Tools

1958-1964 Chevrolet B-Body Front SwayBar

Installation Instructions

Table of contents

Page 16..... Included Components and Hardware List
Page 17-18..... SwayBar Installation

IF YOUR CAR HAS THE FACTORY POWER STEERING SLAVE CYLINDER, KIT 11059121 WILL BE NEEDED TO INSTALL THE STREETGRIP SWAYBAR

Hardware Torque Specifications

5/16”-16..... 17 ftlbs
3/8”-16..... 30 ftlbs

www.ridetech.com

REV1 1/24/22

Major Components .....In the box

Part #	Description	QTY
90001352	Front Sway Bar	1
90002937	End Link Kit	1
90002533	Bushing Strap	2
70015013	Lined Sway Bar Bushing	2
90002534	Bushing and Strap Spacer	4

HARDWARE

QTY	Part Number	Description
4	99311002	5/16"-18 x 1 1/4" Hex Bolt
4	99311003	5/16"-18 x 1 1/2" Hex Bolt
8	99313002	5/16" Flat Washer
4	99372003	5/16"-18 Nylok Nut

Getting Started.....

Note: This sway bar kit utilizes a anti-friction lining in the sway bar bushing. The lining allows the sway bar to move freely and quietly in the bushing. No lubrication is required.

1. Jack the vehicle up to a safe working height and support with jack stands. Make sure the jack stands are stable before working under the car.

2. Remove the stock sway bar.

3. Due to the larger diameter of your new swaybar, the Idler Arm will need to be disconnected from the frame to install the new sway bar.

NOTE: IF YOUR CAR HAS THE FACTORY POWER STEERING SLAVE CYLINDER, KIT 11059121 WILL BE NEEDED TO INSTALL THE STREETGRIP SWAYBAR

4. Open the sway bar bushing at the split and slip it **OVER** the sway bar. Do this for both bushings

5. Disconnect the idler arms from the frame.

6. Insert the new swaybar from the passenger side. position it above the idler arm and steering arm. the center of the bar should hang down towards the ground.

7. Install a 5/16" flat washer on each of (2) 5/16"-18 x 1 1/4" bolts and insert them into the OEM sway bar holes by inserting them in through the access holes in the side of the frame. Install the spacer plate with the wide side positioned to the inside. Hold it in place.

8. Install the bushing strap over the swaybar bushing with the wide side of the strap to the inside on the car. We found some steering box coversions hang down further than others. If yours happens to hit the sway bar, add a 2nd spacer under the bushing. a 2nd set of spacers along with longer hardware is supplied in this kit.

9. Lift the bar in position, the bolts sticking through the frame and spacer will go in the slots of the bushing strap. Hold the bar in place & install a 5/16" flat washer and 5/16"-18 nylok nut on the threads of each bolt sticking through the slots of the bushing strap. Repeat steps 8-10 on the opposite side, but do not tighten the hardware at this time.

10. Reattach the idler arm to the frame using the OEM hardware. Torque the hardware.

11. Install the End Links using **Diagram 1** as a reference. Install both end links before tightening the end link hardware. Tighten the end link barrel nut until it is flush with the end of the bolt, and then tighten it 2 more complete rounds.

12. Torque the SwayBar mounting hardware to 17 ftlbs.

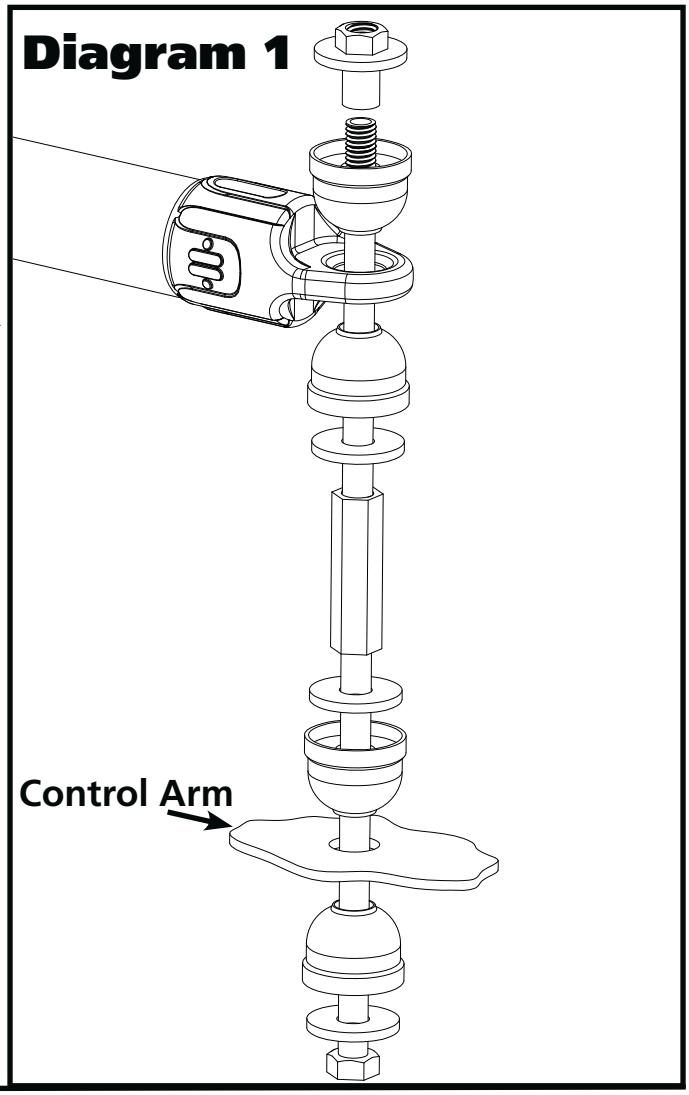

ridetech

Installation Instructions

Part # 11046699 - 1958 Full Size Chevy Rear Upper StrongArm Kit

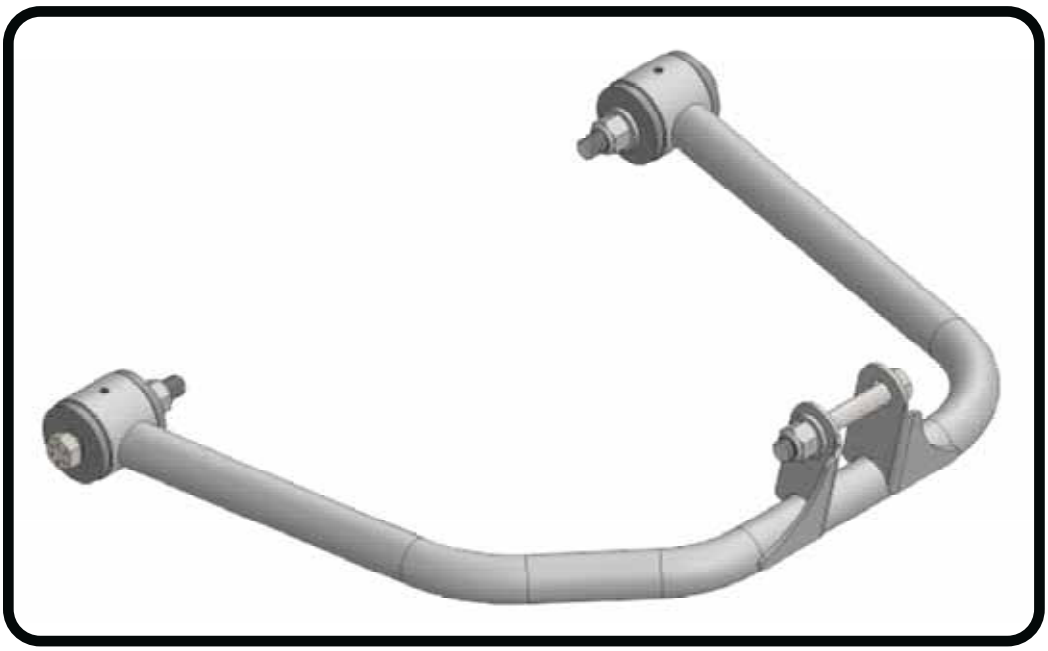

Recommended Tools

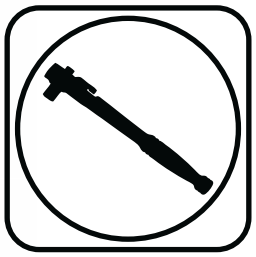

1958 GM "B" Body Rear Upper StrongArm

Installation Instructions

Table of contents

Page 2..... Included Components
Page 3..... Installation

R-JOINT ADVANCED ROD END TECHNOLOGY ridetech

www.ridetech.com

Included Components .....In the box

Item #	Part #	Description	QTY
1	90000505	Rear Upper Control Arm	1
2	70010759	Bushing Half	4
3	90000549	Inner Bushing Sleeve	2
4	99501005	1/2"-13 x 3 1/2" Bolt	3
5	99502009	1/2"-13 Nylok Nut	3
6	99503014	1/2" SAE Flat Washer	3

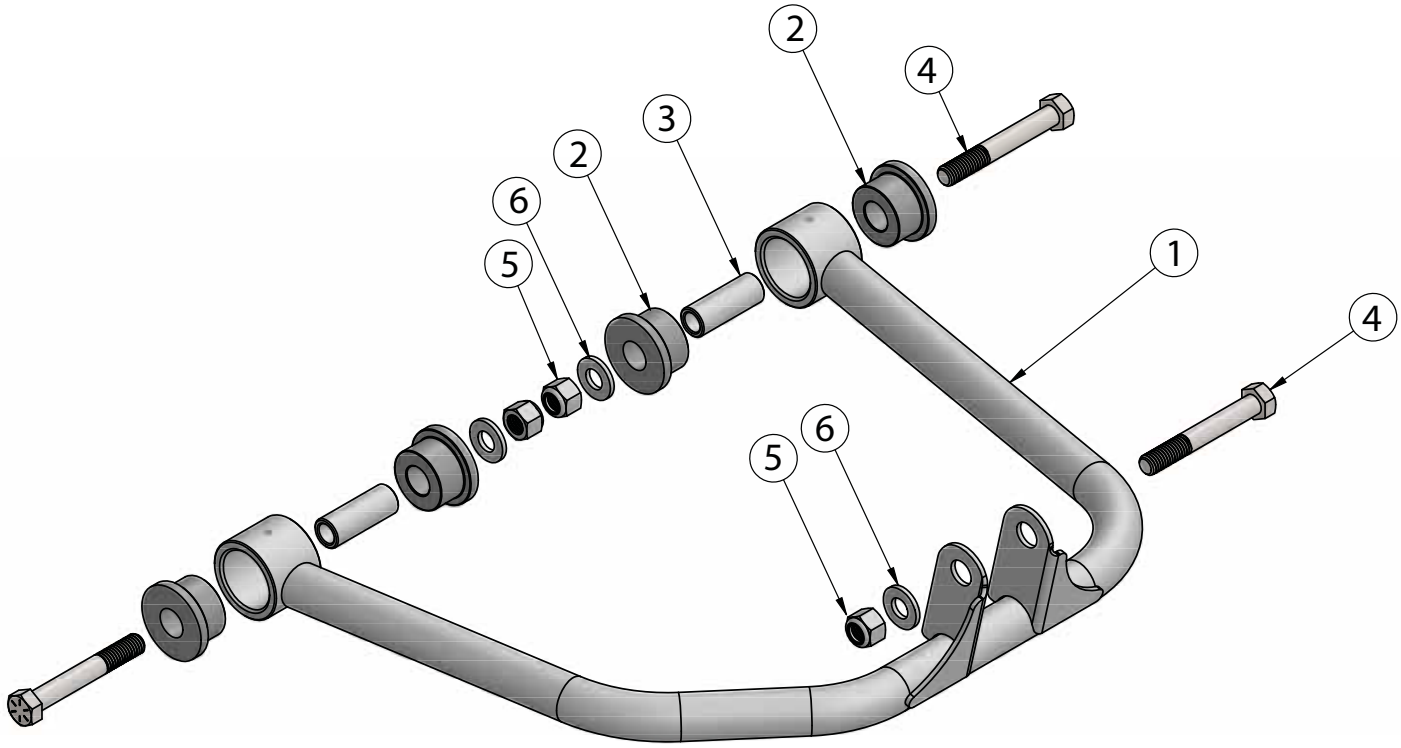

Getting Started.....

1. Raise the vehicle up to a comfortable work height. You will need the support the car by the frame to be able to freely raise and lower the rear axle. Use a jack under the differential to support it. It is best to put the jack toward the pinion, you may need to raise or lower the pinion to attach the control arm to the differential.

Note: Install the lower control arms before installing the upper control arm.

2. Remove the OEM upper control arm from the car.

3. Inspect the bushings in the differential, replace if necessary.

Upper StrongArm Installation

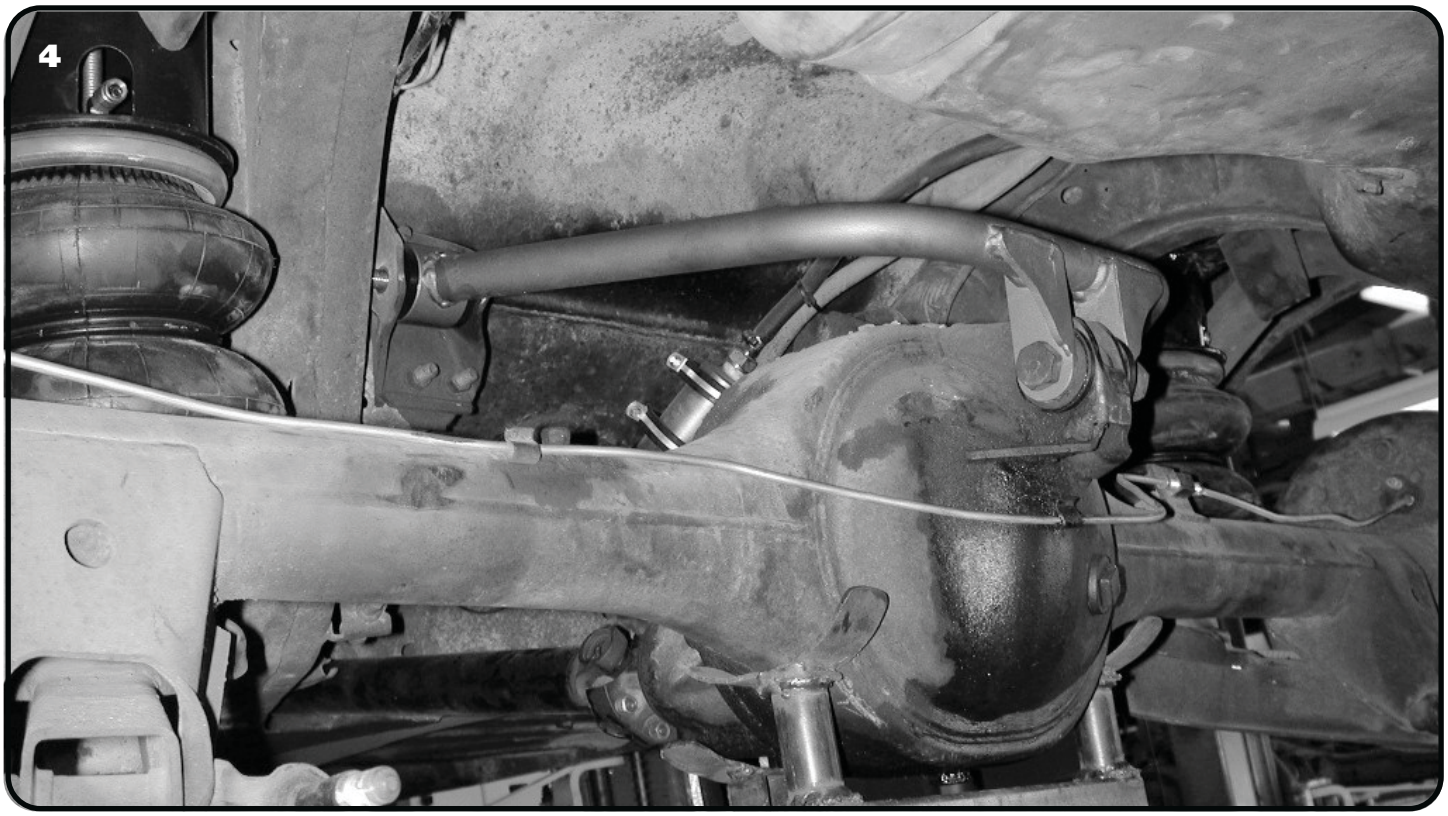

4. Bolt the new upper control arm in the OEM location using the hardware supplied in the kit. The control arm is attached to the car using (3) 1/2"-13 x 3 1/2" bolts, 1/2" flat washers, and 1/2"-13 nylok nuts. Tighten the hardware enough to eliminate any gaps.

ridetech

Installation Instructions

Part # 11056299 - 1958-1964 Full Size Chevy Rear CoilOver StrongArms

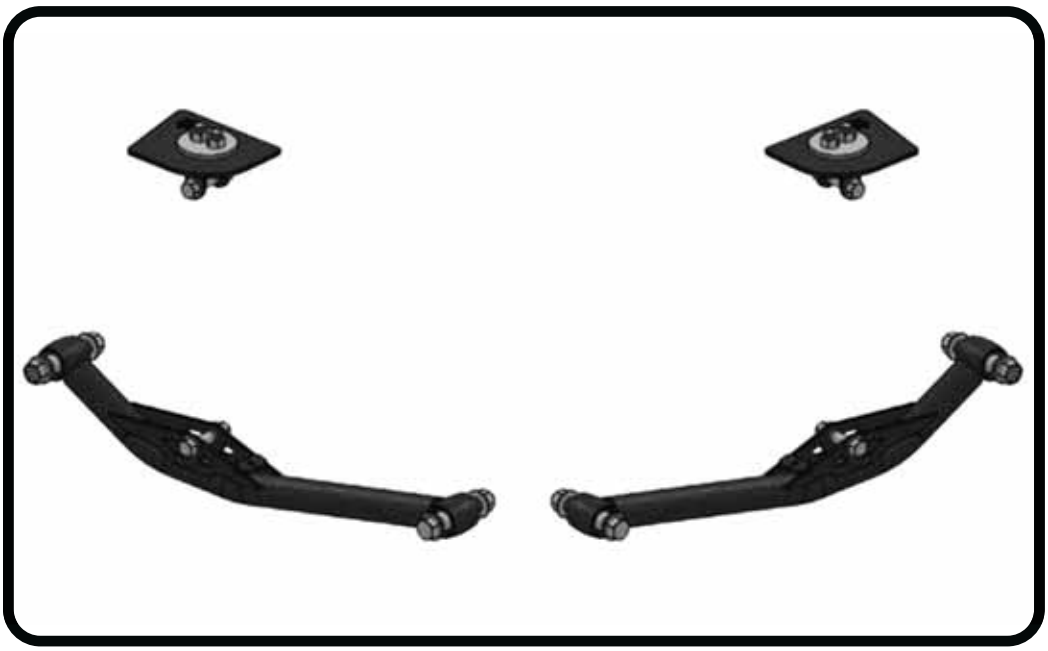

Recommended Tools

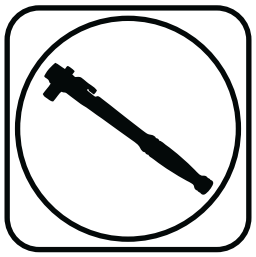

1958-1964 GM "B" Body Rear CoilOver StrongArms

Installation Instructions

Table of contents

Page 20..... Included Components
Page 21..... Hardware & Getting Started
Page 22-23..... Upper Mount Installation
Page 24..... Lower StrongArm Installation
Page 25..... Shock Installation

R-JOINT ADVANCED ROD END TECHNOLOGY ridetech

www.ridetech.com

812-482-2932

Included Components .....In the box

Item #	Part #	Description	QTY
1	90001348	Lower Control Arms	2
2	90001349	Upper Mount base plate	2
3	90002158	Universal Shock Mounting Bracket	2
4	90001357	Upper Clamp Plate	2
5	90001350	Rear lower Control Arm "D" Bolt	2
6	70013858	R-Joint Spacers - .625" ID x 1.00"	8
R-Joint Components - (Installed in bar ends)			
7	70013279	Retaining Ring	4
8	70013280	Wavo Wave Spring	4
9	70013275	R-Joint Center Ball	4
10	70013276	R-Joint Composite Center Ball Cage	4

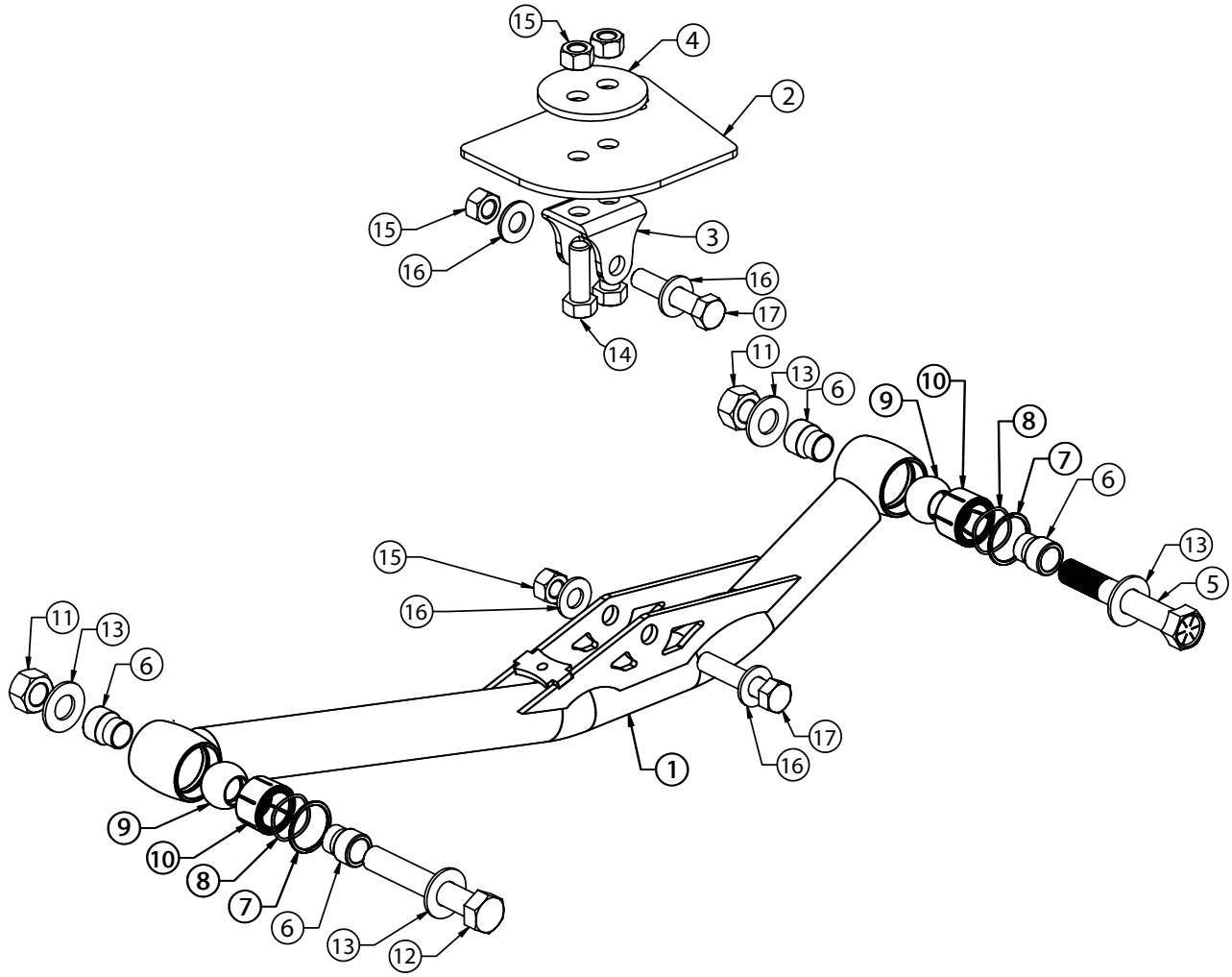

ridetech

Installation Instructions

Hardware Kit..... #99010114

Item #	QTY	Part Number	Description
	REAR UPPER CONTROL ARM		
11	4	99622001	5/8"-18 Nylok Nut
12	2	99621010	5/8"-18 x 4" Hex Bolt
13	8	99623001	5/8" SAE Flat Washer
	REAR UPPER SHOCK MOUNT		
14	4	99501053	1/2"-13 X 1 1/2" Hex Bolt
15	4	99502009	1/2"-13 Nylok Nut

Item #	QTY	Part Number	Description
	REAR COILOVER MOUNTING		
17	4	99501050	1/2"-13 X 2 1/2" Hex Bolt
15	4	99623010	1/2"-13 Nylok Nut
16	8	99561004	1/2" SAE Flat Washer
	EMERGENCY BRAKE CABLE		
Not Shown	2	99311016	5/16"-18 X 3/4" Hex Bolt
	2	99313002	5/16" SAE Flat Washer
	2	99313003	5/16" Split Lock Washer

R-JOINT SPACER INSTALLATION

Install the Spacers by inserting the SMALL side of the SPACER into the Center Pivot Ball. Push them in until they bottom out and stop.

UPPER R-JOINTS

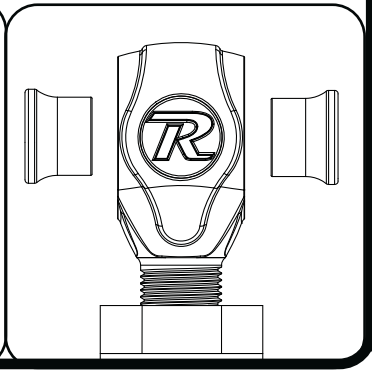

New R-Joints will be quite stiff (75-90 in/lbs breakaway torque) until they "break in" after a few miles of use. After the break in period they will move much more freely. Because the composite bearing race contains self lubricating ingredients, no additional lubrication is needed or desired. Any additional lubrication will only serve to attract more dirt and debris to the R-Joint and actually shorten its life.

Getting Started.....

Congratulations on your purchase of the Ridetech B-Body CoilOver StrongArms. These StrongArms have been designed to give your B-Body excellent handling along with a lifetime of enjoyment. Some of the key features of the StrongArm System: The StrongArms are designed to utilize a CoilOver Shock setup, R-Joints are used to eliminate bushing deflection along with providing free suspension movement through the entire travel. The R-Joints are made from a material that is self lubricating so no lubrication is needed.

Note: These control arms are designed for use with the Ridetech CoilOvers and the MuscleBar swaybar. **The factory shocks and springs will not fit these StrongArms. If you have a swaybar that attaches to the lower control arms, it will NOT work with these StrongArms.**

1. Raise the vehicle up to a comfortable work height. You will need the support the car by the frame to be able to freely raise and lower the rear axle. Use a jack under the differential to support it.

2. Remove the rear shocks, coil springs, and lower control arms. The lower shock mounts are lightly pressed into the lower control arm mount and will not turn. You will need to drive these out with a hammer. Put something over the end of the threads to keep from damaging them.

Upper Mount Installation

2. This kit contains a Upper Shock Mount setup that will require drilling to install it. **Image 2** is of the upper mount installed, we will cover the installation in the next steps. The rear of the plate will need to be aligned with the body mount that is to the rear of the coil spring mount. See the ARROW in **Image 2**.

3. The upper mount bolts into the car and will require the holes to be drilled. Start by holding the plate up in the car aligning the back edge with the body mount. Mark the holes on the frame.

4. The frames of these cars varied through the years, some have a center hole, some are solid. The frame we are doing this install on has a center hole. If the frame is solid, drill the marked holes with a 1/2" drill bit. Frames with the center hole will require a die-grinder or something similar to notch the edges of the center hole. We used a die-grinder with a burr bit to notch the holes. Repeat **Steps 2-4** on the opposite side.

Upper Mount Installation

6. The Upper Mount is attached to the frame using (2) 1/2"-13 x 1 1/2" Bolts. Insert the bolts through the shock mount and into the upper plate.

7. Position the Shock Mount/Plate up into the frame, holding the shock mount and hardware in place.

8. Install the Upper Backer plate by installing it on the 1/2" bolts that are sticking through the top side of the frame. Install a 1/2"-13 nylok nut on each of the bolts sticking through the frame and backer plate. Torque the hardware to 75 ftlbs. Repeat for the second side of the car.

Lower StrongArm Installation

9. The Lower Control Arm has the bottom CoilOver mount built in, it will need to be installed with the CoilOver mount up and to the rear of the car. Install a 5/8" ID R-joint Spacer into the front R-joint. The Small Diameter goes into the R-joint. Slide the R-joint into the OEM lower control arm mount. Align the holes in the frame with the thru-hole of the R-Joint.

NOTE: This kit contains (4) 5/8"-18 x 4" bolts, 2 of these bolts have a FLAT machined into them. The 2 bolts with the flat will be used in the REAR of the lower control arms.

10. Install a 5/8" Flat Washer on a 5/8"-18 x 4" bolt. Insert the bolt/washer into the frame/ R-Joint of the lower bar. Install a 5/8" flat washer and 5/8"-15 nylok nut on the threads of the bolt sticking through the frame. Tighten the hardware to eliminate any gaps.

11. Install the R-joint spacers into the rear R-Joints. Slide the rear of the lower control arm into the axle mount. Line up the mounting holes in the axle mount with the center hole of the R-joint. THE REAR R-JOINT REQUIRES THE 5/8"-18 x 4" BOLT WITH THE FLAT MACHINED INTO THE THREADS. Install a 5/8" flat washer on the 4" bolt with the flat. Insert the bolt/washer through the mounting hole. Align the Flat with the flat in the outer flange of the lower axle mount. Install a 5/8" flat washer and 5/8"-15 nylok nut on the threads of the bolt sticking through the frame. Tighten the hardware to eliminate any gaps

Shock Installation

12. Insert the shock bearing t-bushings into the bearing of the shock body. Insert the shock into the upper mount, lining up the holes of the mount and shock. Install a 1/2" flat washer on a 1/2"-13 x 2 1/2" bolt. Insert the bolt/washer into the upper mount/shock. Install a 1/2" flat washer and 1/2"-13 nylok nut and Torque to 50 ftlbs.

13. Insert the shock bearing t-bushings into the bearing of the shock eyelet. Insert the shock into the lower control arm, lining up the holes of the mount and shock. Install a 1/2" flat washer on a 1/2"-13 x 2 1/2" bolt. Insert the bolt/washer into the upper mount/ shock. Install a 1/2" flat washer and 1/2"-13 nylok nut and Torque to 50 ftlbs.

14. Bolt the tab of the emergency brake cable to the provision in the lower control arm. This provision is built into the lower shock mount. Use the 5/16"-18 x 3/4" bolt, 5/16" split lock washer, and 5/16" flat washer to attach the cable. Torque the hardware to 12 ftlbs.

ridetech

Installation Instructions

Part # 11066210 - 1959-1964 B-Body Rear CoilOvers

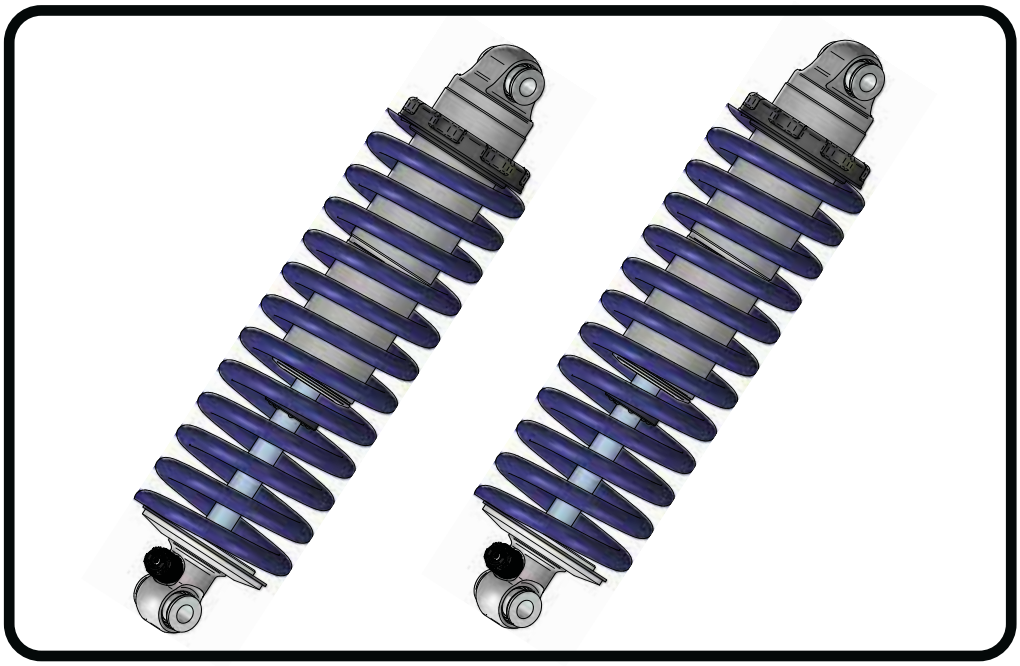

Recommended Tools

1959-1964 B-Body HQ Series Rear Coilovers

Installation Instructions

Table of contents

Page 30..... Included Components
Page 31..... Assembly and Adjusting
Page 32..... Final Adjusting and Preloading the Spring

Coilover Dimensions:

Center of bearing to Center of bearing:

Compressed:	9.43”
Ride Height:	11.50”
Extended:	13.03”

www.ridetech.com

Major Components .....In the box

Item #	Part #	Description	QTY
1	982-10-803	3.6" Stroke HQ Series Shock	2
2	815-05-022	Shock Eyelet	2
4	59080575	Coilspring 8" 575lb	2
5	70010828	Delrin Spring Washer	4
6	803-00-199(kit)	Lower Spring Adjuster Nut (803-00-199 kit)	2
7	803-00-199(kit)	Adjuster Nut Locking Screw (803-00-199 kit)	2
8	803-00-199(kit)	Retaining Ring (803-00-199 kit)	2
9	90002043	Shock Bearing Spacers	8
	90001994	5/8" ID Bearing (installed in shock and eyelet)	4
	90001995	Bearing Snap Ring (installed in shock and eyelet)	8

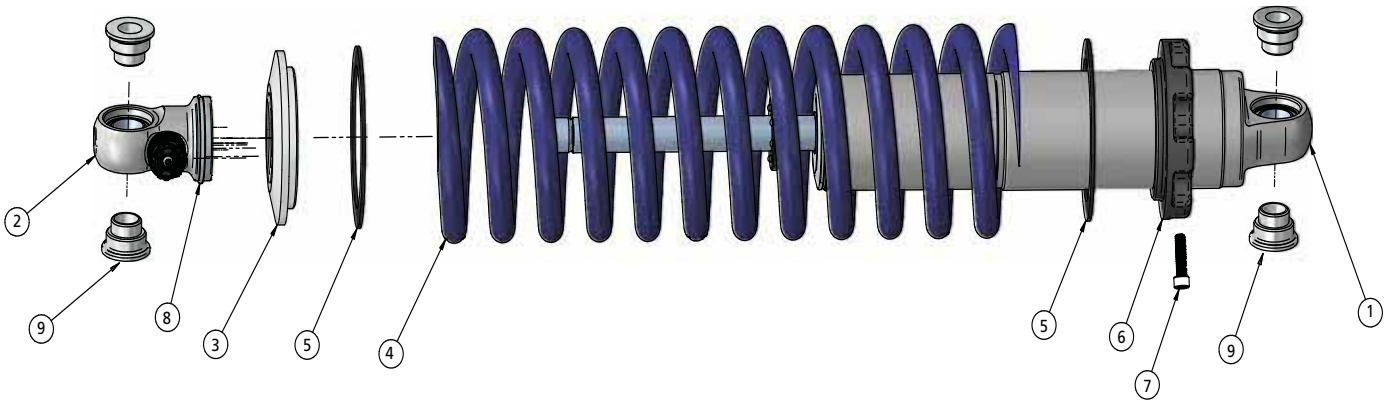

CoilOver Assembly...

First, using the supplied lower adjuster nut (803-00-199) thread the nut onto the shock from the bottom side as seen in figure 1. Remove the plastic pellet that is in the split of the adjuster nut.

Next, install a delrin washer then coil spring over the top of the shock as seen in figure 2.

Before the upper spring mount can be installed screw the adjuster knob on the upper eye mount to the firmest setting (clockwise) as seen in figure 3. Then remove the Knob by holding it while removing the center screw.

Once the knob is removed slide a Delrin washer over the eyelet. Next, slide the upper spring mount (803-00-199) over eyelet as seen in figure 4.

Install upper spring mount retainer clip (803-00-199) into the groove on the upper eyelet as seen in figure 5. Then, reinstall adjuster to complete assembly.

Install the locking screw in the adjuster nut before setting spring preload, but DO NOT tighten until the spring preload has been set.

NOTE: Remember to adjust the shock valving before driving, the shock is currently set to full stiff.

Shock Adjustment 101- Single Adjustable

Rebound Adjustment:
How to adjust your new shocks.
The rebound adjustment knob is located on the top of the shock absorber protruding from the eyelet.
You must first begin at the ZERO setting, then set the shock to a medium setting of 12.

-Begin with the shocks adjusted to the ZERO rebound position (full stiff). Do this by rotating the rebound adjuster knob clockwise until it stops.

-Now turn the rebound adjuster knob counter clock wise 12 clicks. This sets the shock at 12. (settings 21-24 are typically too soft for street use).

Take the vehicle for a test drive.

-if you are satisfied with the ride quality, do not do anything, you are set!

-if the ride quality is too soft increase the damping effect by rotating the rebound knob clock wise 3 clicks.

Take the vehicle for another test drive.

-if the vehicle is too soft increase the damping effect by rotating the rebound knob clock wise 3 additional clicks.

-If the vehicle is too stiff rotate the rebound adjustment knob counter clock wise 2 clicks and you are set!

Take the vehicle for another test drive and repeat the above steps until the ride quality is satisfactory.

Note:
One end of the vehicle will likely reach the desired setting before the other end. If this happens stop adjusting the satisfied end and keep adjusting the unsatisfied end until the overall ride quality is satisfactory.

Final Tightening and Adjusting

Ride Height

We have designed most cars to have a ride height of about 2" lower than factory. To achieve the best ride quality & handling, the shock absorber needs to be at 40-60% overall travel when the car is at ride height. This will ensure that the shock will not bottom out or top out over even the largest bumps. Measuring the shock can be difficult, especially on some front suspensions. Measuring overall wheel travel is just as effective and can be much easier. Most cars will have 4-6" of overall wheel travel. One easy way to determine where you are at in wheel travel is to take a measurement from the fender lip (center of the wheel) to the ground. Then lift the car by the frame until the wheel is just touching the ground, re-measure. This will indicate how far you are from full extension of the shock. A minimum of 1.5" of extension travel (at the wheel) is needed to ensure that the shock does not top out. If you are more than 3" from full extension of the shock then you are in danger of bottoming out the shock absorber.

Adjusting Spring Height

When assembling the CoilOver, screw the spring retainer tight up to the spring (0 preload). After entire weight of car is on the wheels, jounce the suspension and roll the car forward and backward to alleviate suspension bind.

- If the car is too high w/ 0 preload then a smaller rate spring is required. Although threading the spring retainer down would lower the car, this could allow the spring to fall out of its seat when lifting the car by the frame.

- If the car is too low w/ 0 preload, then preload can then be added by threading the spring retainer up to achieve ride height. On 2.6" - 4" stroke shocks, up to 1.5" of preload is acceptable. On 5-7" stroke shocks, up to 2.5" of preload is acceptable. If more preload is needed to achieve ride height a stiffer spring rate is required. Too much preload may lead to coil bind, causing ride quality to suffer.

ridetech

Installation Instructions

Part # 11059102 - 58-64 Chevy Fullsize Rear MuscleBar

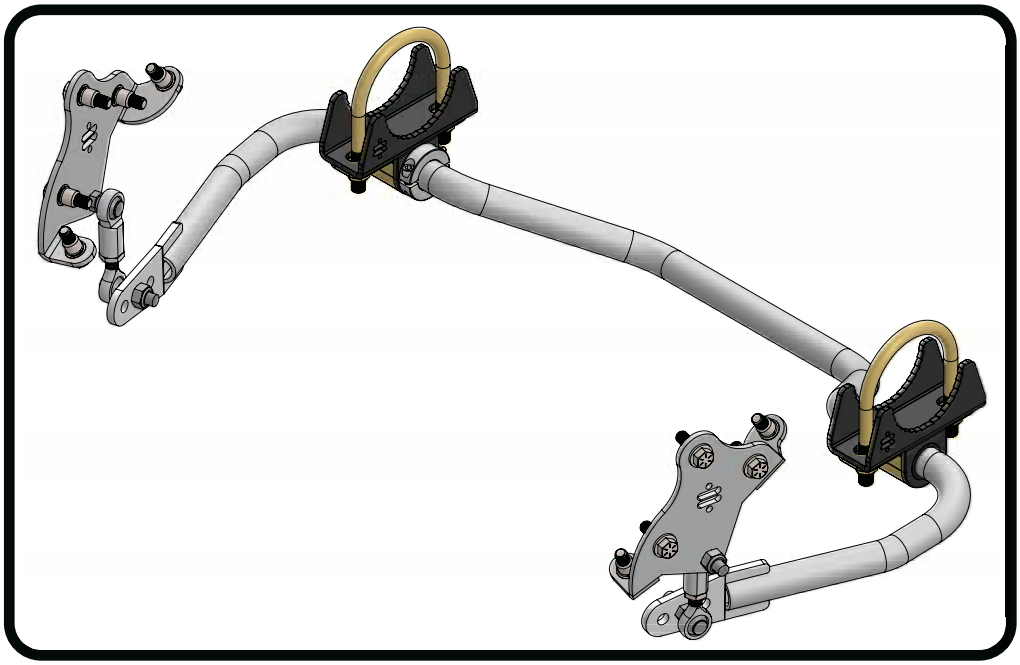

Recommended Tools

58-64 Chevy Fullsize MuscleBar
Installation Instructions

Table of contents

Page 34..... Included Components
Page 35..... Hardware List & Getting Started
Page 36..... MuscleBar Installation
Page 37..... MuscleBar Installation
Page 38..... Final Tightening and Adjusting
Page 39..... Rivnut Installation

Hardware Torque Specifications

3/8”-16..... 30 ftlbs
7/16”-20..... 55 ftlbs
M10-1.5..... 37 ftlbs

www.ridetech.com

REV5 1/27/22

Major Components .....In the box

Item #	Part #	Description	QTY
1	90001353	Rear Sway Bar	1
2	70015012	Lined Sway Bar Bushing	2
3	90001250	Sway Bar Bushing Strap	2
4	70014735	10mm Female with Stud	2
5	70014736	10mm Male with Stud	2
6	90001249	Axle Bracket	2
7	70014301	Locking Rings	2
8	90001355	Linkage Frame Bracket - Driver	1
9	90001356	Linkage Frame Bracket - Passenger	1
10	90000088	7/16”-20 U-Bolt	2
	85000008	3/8” Rivnut Installation Tool - not shown	1

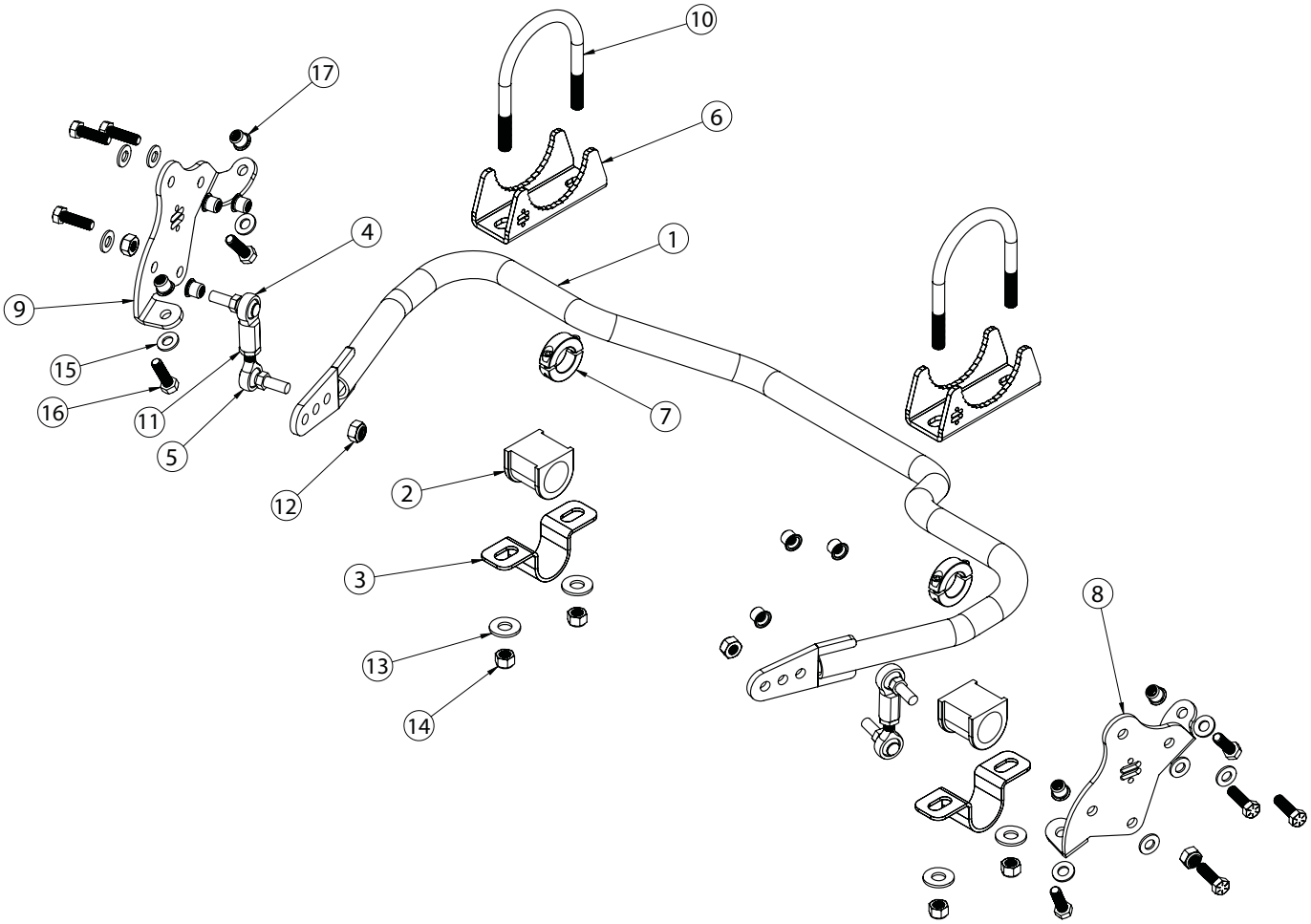

Hardware List .....In the box (KIT # 99010133)

Item #	QTY	Part Number	Description
POSILINK			
11	2	99112001	M10-1.5 Hex Jam Nut
12	4	99112002	M10-1.5 Nylok Nut
AXLE MOUNT U-BOLT			
13	4	99433002	7/16" Flat Washer
14	4	99432002	7/16"-20 Nylok Nut
FRAME BRACKET TO FRAME			
15	10	99373002	3/8" SAE Flat Washer
16	10	99371005	3/8"-16 x 1 1/4" Hex Bolt
17	10	99372007	3/8"-16 Rivnut
	1	85000007	17/32" Drill Bit

Getting Started.....

Congratulations on your purchase of the Ridetech Rear Muscle Bar. These system has been designed to give your car excellent handling along with a lifetime of enjoyment. One of the key features of this MuscleBar: Posilinks - The Posilink makes the reaction of the swaybar instantaneous, tune ability - this Musclebar has 3 positions to aid in the tuning of the handling of your car.

The MuscleBar has 3 positions to aid in the tuning of your cars handling. We start in the front position and tune from there. The positions to the rear of the car will make the MuscleBar stiffer.

Note: This sway bar kit utilizes a anti-friction lining in the sway bar bushing. The lining allows the sway bar to move freely and quietly in the bushing. No lubrication is required.

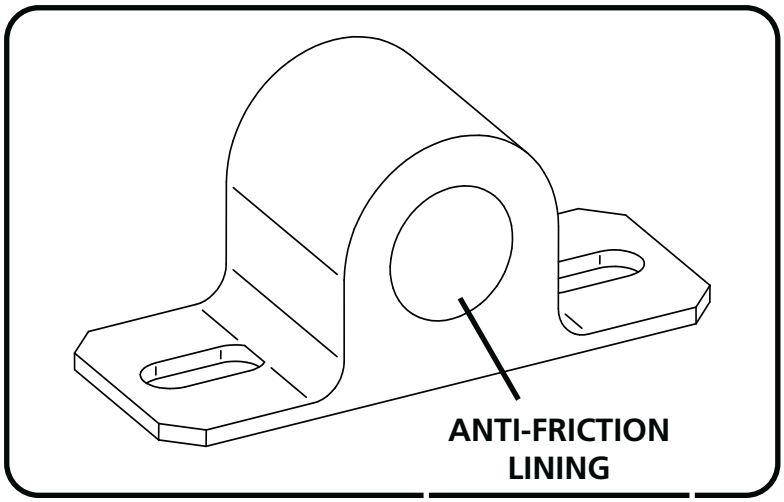

1. This sway bar kit utilizes a anti-friction lining in the sway bar bushing. The lining allows the sway bar to move freely and quietly in the bushing. No lubrication is required.

MuscleBar Installation

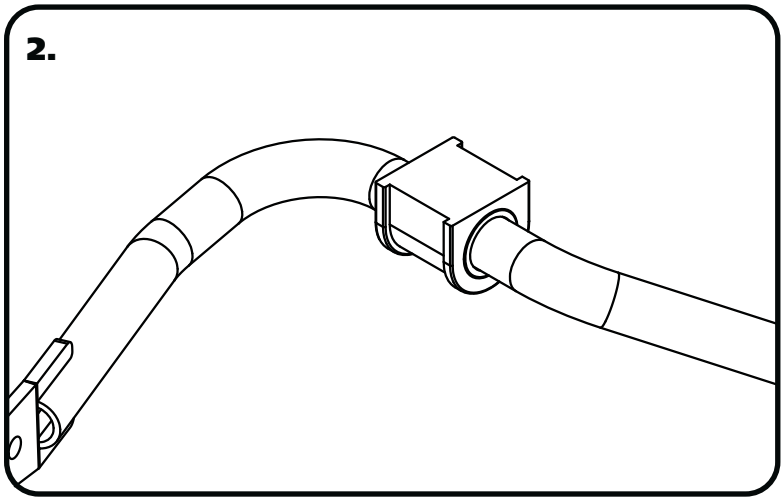

2. Open the SwayBar Bushing at the split and slip it **OVER** the sway bar. Do this for both bushings.

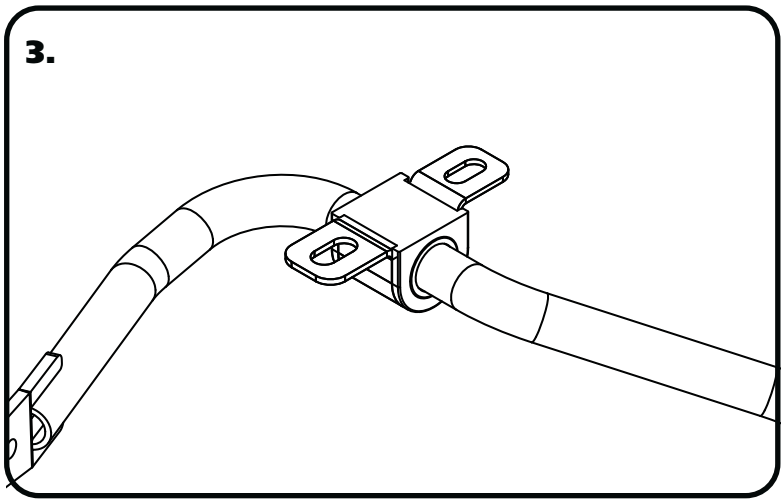

3. Install the Bushing Straps over the SwayBar Bushings.

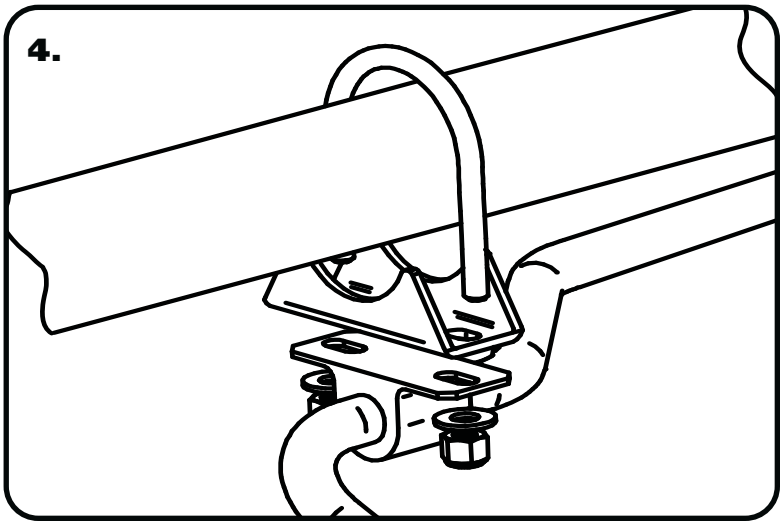

4. Install the U-bolts over the axle, slide the saddles onto the u-bolts along with the MuscleBar. The MuscleBar should be centered on the rear end. Install the 7/16" washer and Nylok nut loosely for now. **DO NOT TIGHTEN THE NUTS AT THIS TIME.**

Note: It may be necessary to trim the panhard mount to get the saddle to sit in place properly on the axle tube. The saddle should be level with the ground.

Note: With the arms parallel with the ground the rear of the Muscle bar should be angle down towards the ground.

MuscleBar Installation

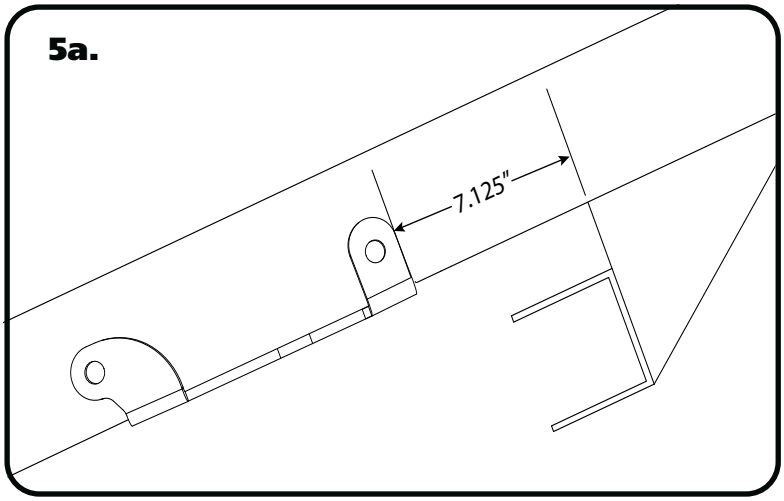

5a. There is a Driver and Passenger frame bracket. In **Illustrations 5a & 5b**, the drivers side is shown. The bracket gets located by measuring from the lower control arm frame bracket. The front lower corner of the frame bracket is located **7 1/8"** (measuring towards the rear of the car) from the factory control arm bracket. This measurement is taken right where the factory bracket attaches to the frame.

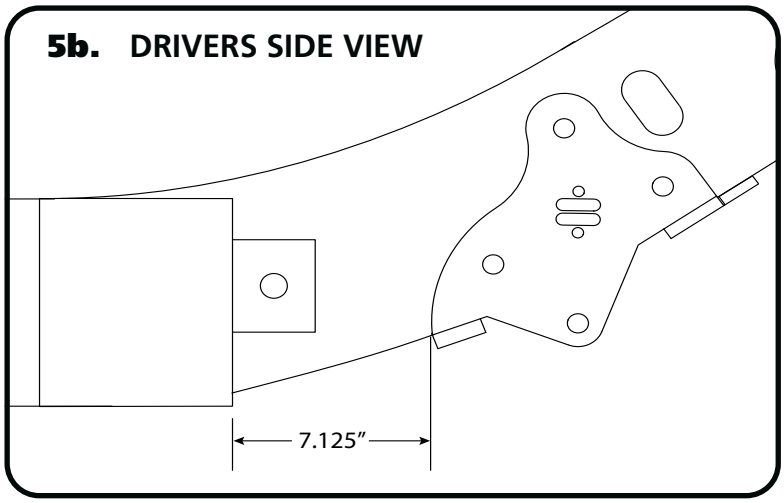

5b. This illustration shows the frame bracket as looking from the side. With the frame bracket held in place mark the (5) mounting holes. Drill these holes with the supplied 17/32" drill bit. Install the supplied (5) 3/8"-16 Rivnuts using the tool supplied in the kit. **Refer to the Rivnut installation instructions on PAGE 7 for proper Rivnut installation.** Install a 3/8" Flat Washer one each of (5) 3/8"-16 x 1 1/4" Hex Bolts. Attach the bracket to the frame with the bolts/washers.

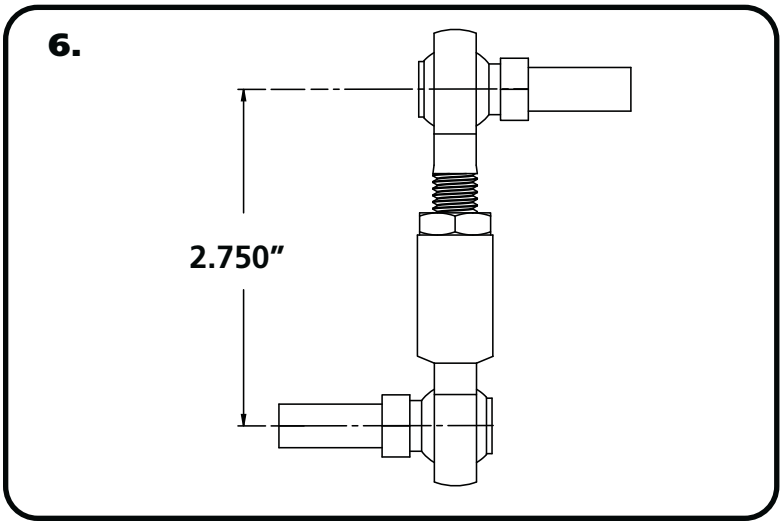

6. Assemble the end links. First, thread a M10-1.5 Jam Nut onto the threads of the male end link body. Next, thread the male end link body into the female end link body. Set them to 2 3/4" center to center of the end links. Keep the studs of the end links 180° of each other and tighten the jam nut against the female end link.

Final Tightening and Adjusting

7. Install the PosiLinks in the frame brackets and in the FRONT hole in the MuscleBar. **The Posilinks are installed with the stud on the upper PosiLink pointing outward and the stud on the lower Posilink pointing to the inside of the car.** Install the 10mm Nylok on Posilink and tighten nut.

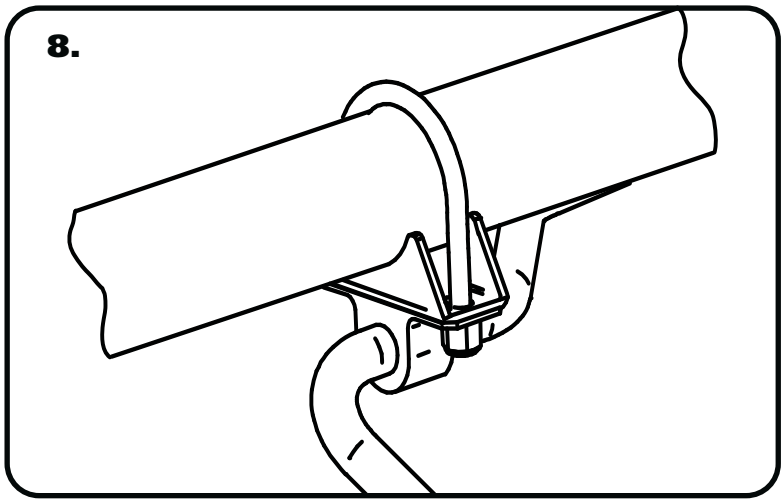

8. Tighten the 7/16" Nylok nuts on the U-bolts making sure the Musclebar is centered on the rear end.

9. Install the locking rings on the outside of each bushing assembly. Use a hex key to take the locking ring apart. Reassemble it on the bar positioned next to the inside of the bushing assembly. Push the locking ring up against the bushing assembly and tighten.

10. The MuscleBar has (3) holes in the arms for adjustment. The front hole is the standard hole. You can stiffen the bar by moving the Posilink in to the holes closer to the differential. We recommend going one set of holes at a time when tuning. Going too stiff could make the car oversteer.

ridetech

Installation Instructions

Rivnut® Installation & Specs

1. Drill Hole in Frame using the SUPPLIED DRILL BIT keeping the Drill square with the metal.

2. We recommend installing (2) 3/8" Flat Washers between the bolt head and the lower anvil of the installation tool. Thread a Rivnut® onto the supplied Tool. Thread the Rivnut all the way onto the Tool until it stops.

3. Insert the Tool and Rivnut® into the drilled hole 90° to the Frame Rail.

4. The Tool requires (2) 9/16" Wrenches to use. A Ratchet can be used on the top of the Tool.

KEEP THE TOOL AND RIVNUT 90° TO THE SURFACE WHILE TIGHTENING

5. Put a 9/16" Wrench on the Lower Hex of the tool. Use a Wrench or Ratchet on the Top hex to Tighten.

6. Hold the Wrench in one position and turn the TOP HEX CLOCKWISE to engage the Rivnut®. Keep Turning the TOP WRENCH until you feel a positive stop and you can't turn the TOP WRENCH anymore.

7. Break the Tool loose by turning the TOP HEX counterclockwise and thread the Tool out of the Rivnut®

THE DATA BELOW ILLUSTRATES THE STRENGTH OF THE RIVNUT®

RIVNUT® Fastener Engineering Data

Upset Load (lbs.)		
RIVNUT ® Size	Steel	
	Min. Grip	Max. Grip
3/8-16	4965	5325

Fig. 1

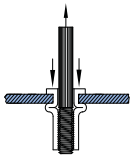

Ultimate thread strength (lbs.)		
RIVNUT ® Size	Steel	
	Min. Grip	Max. Grip
3/8-16	11500	10450

Fig.2

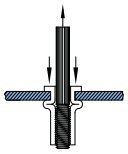

Ultimate tensile strength (lbs.)	
RIVNUT ® Size	Steel
3/8-16	3900

Fig. 3

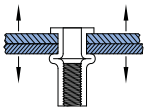

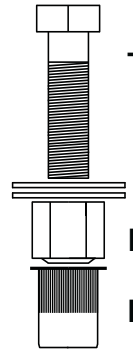

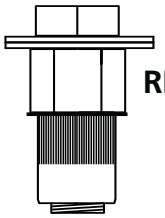

Figure 2

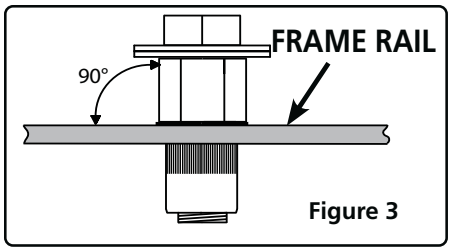

Figure 3

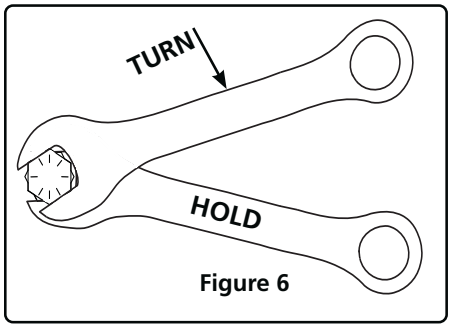

Figure 6

Single Shear Strength 3/8" Grade 5 Bolt 3,975.8 lbs

www.ridetech.com
812-482-2932