ridetech

INSTALLATION INSTRUCTIONS

Part # 12299516

Rear Leaf Spring Brackets

2015-2026 Ford F-150

www.ridetech.com
812.482.2932

Please Read And Understand All Instructions And Warnings Prior To The Installation Of This Product.

Congratulations on your new Ridetech product! It's an honor that you've selected the Ridetech brand to upgrade your ride. Our products are developed around quality and performance without compromise. We're confident you'll have many years (and miles) of pure driving enjoyment.
Thank you for choosing Ridetech!

Road Map

Exploded View & Parts Listing	3
Disassembly	4-5
Shim Replacement	6
Front Bracket Installation	7-8
Shackle Installation & Torque Specs	9

NOTE

On some 2024 & newer trucks, using the top hole in the rear shackle may result in contact between the leaf spring and the truck bed cross brace. If you experience this interference on your vehicle, you may either use a lower hole on the shackle (which will slightly raise the ride height), or notch out the bed brace.

HEADLIGHT SENSORS

Trucks equipped with headlight sensors require bracket kit # 12299501.

Trucks equipped with the "On-Board Scale" option (4 headlight sensors) require bracket kit # 12299502.

EXPLODED VIEWS AND PARTS LISTING

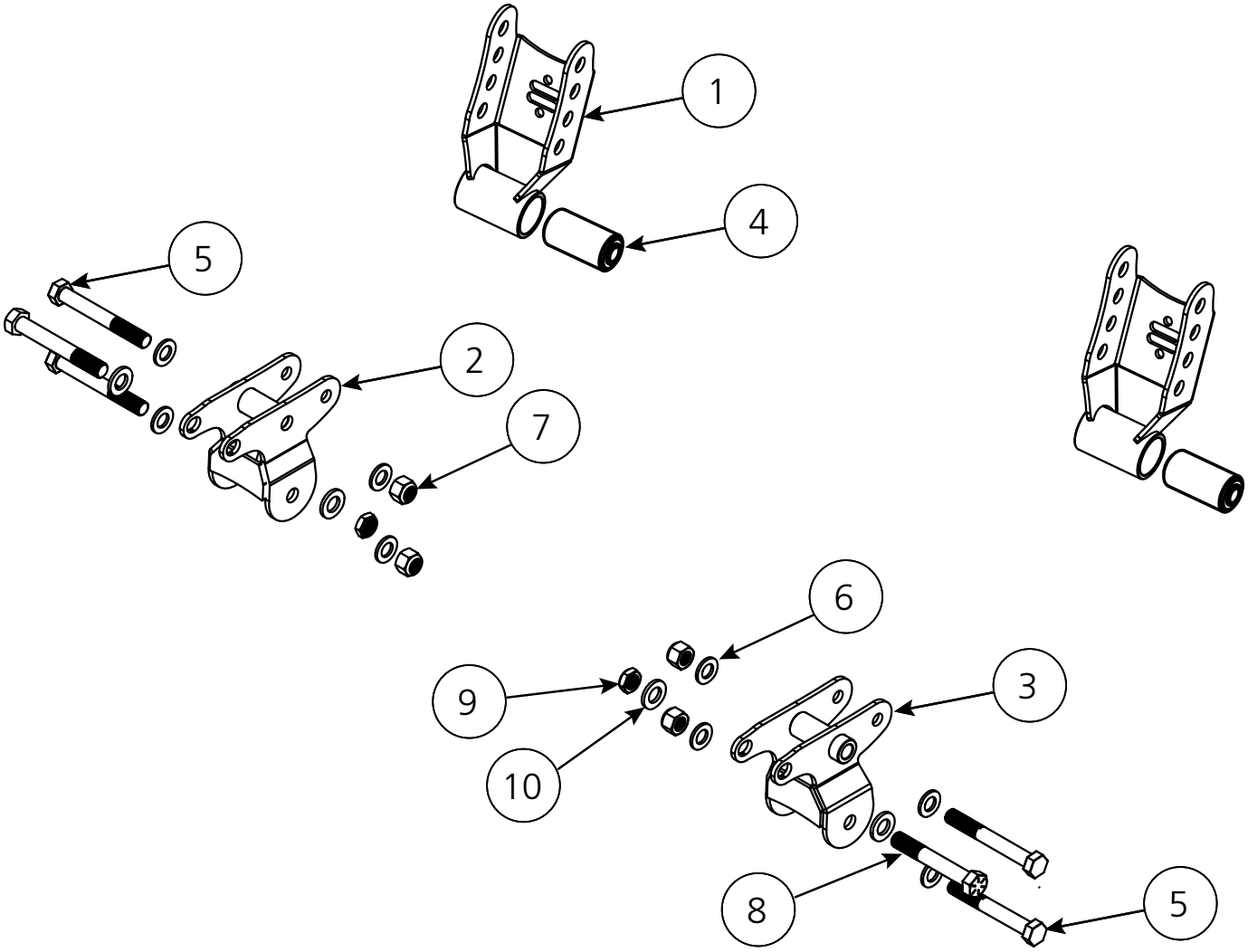

Item #	Part #	Description	Qty
1	90003364	Adjustable Shackle	2
2	90003273	Front Leaf Spring Mount - Passenger	1
3	90003272	Front Leaf Spring Mount - Driver	1
4	70015559	Shackle Bushing	2
5	99181001	M18-2.5 X 130 HCS GR10.9	4
6	99183001	M18 FLAT WASHER GR10.9	8
7	99182001	M18-2.5 NYLOK NUT GR10.9	4
8	99751011	3/4-16 X 5 HCS GR8	2
9	99752013	3/4-16 THIN NYLON JAM NUT GR2	2
10	99753004	3/4 SAE FLAT WASHER	4

Disassembly

1. Raise the vehicle to a safe and comfortable working height and support it by the frame. You will need to be able to move the rear differential up and down. Use a jack under the rear axle to raise and lower it during the install.

2. If you will be replacing the rear shocks with Ridetech HQ Series shocks, jack up the rear end slightly to remove the tension on the existing shocks and then remove them.

3. 2021 & Newer Trucks Only: Disconnnect the headlight sensor linkage from the driver side leaf spring mount (Figure 1). There is no sensor on the passenger side.

4. Before removing the leaf springs, mark them "driver" and "passenger".

5. 2015-2017 Trucks Only: These trucks may have a cable operated emergency brake. If this applies to your truck, disconnect the emergency brake cable brackets from the driver side front leaf spring mount and passenger side leaf spring axle pad. Retain the hardware. These will be reattached later.

6. Lower the jack to relieve the tension on the rear springs, but keep the jack touching the rear axle.

7. Remove the u-bolts and axle clamps to disengage the axle from the leaf springs, then lower the axle to gain clearance on the leaf springs, but DO NOT strain the brake lines.

8. Due to the location of the fuel tank and exhaust, we have found the best way to remove the front leaf spring mounting bolt is to cut off the head of the bolt (Figure 2). Loosen the nut enough to expose the shank of the bolt, push the bolt in toward the fuel tank/exhaust, then cut off the head of the bolt. Be careful to not damage the fuel tank, exhaust, or frame.

9. Support the front of the leaf spring and remove the remainder of the leaf spring hanger bolt.

Figure 1

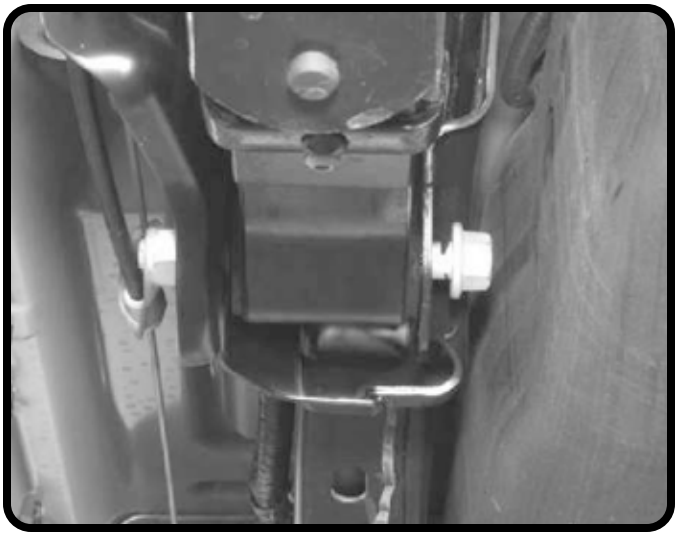

Figure 2

Disassembly

10. Support the rear of the leaf spring and remove the bottom leaf spring shackle bolt (Figure 3). Remove the existing rear shackle from the leaf spring.

NOTE: When installing this kit in conjunction with the Ridetech 12299521 Axle Flip Kit, the spring pack locating pins must be flipped, and offset shims must be installed before reinstalling the leaf springs. The shims are included with the 12299521 Axle Flip Kit. Follow steps 11-15 for this procedure.

If you are not installing the flip kit, you may jump to step 16 on page 7.

11. Remove the nuts securing the u-bolt locating plate. The pins can be held with a pair of vise grips while remove the nuts as shown in Figure 4.

12. Remove and discard the U-bolt locator (Figure 5).

Figure 3

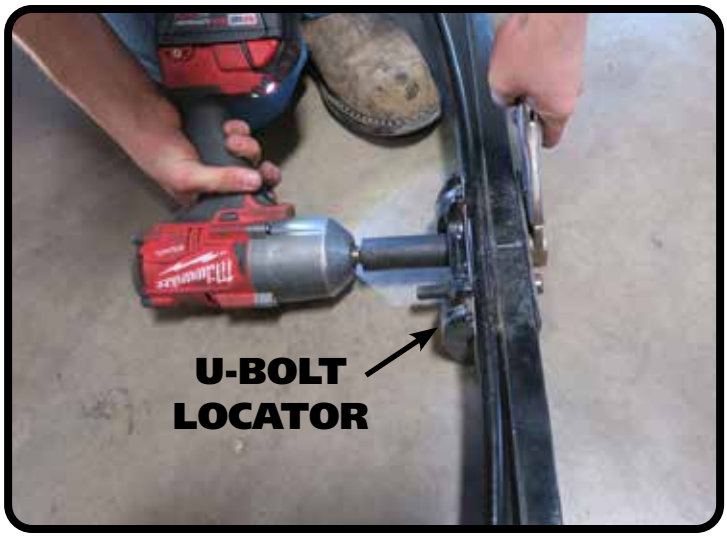

Figure 4

Figure 5

Shim Replacement

13. Remove and discard the top shim as shown in Figure 6.
The CENTER & BOTTOM shims will be replaced with the offset shims supplied with this kit.

14. Remove the locating pins and remove the center and bottom shims (Figure 6).

Figure 6

The OEM shims have the holes centered in the plate as shown in Figure 7 (top image).

The replacement shims have the holes offset to the front of the truck as shown in Figure 7 (bottom image).

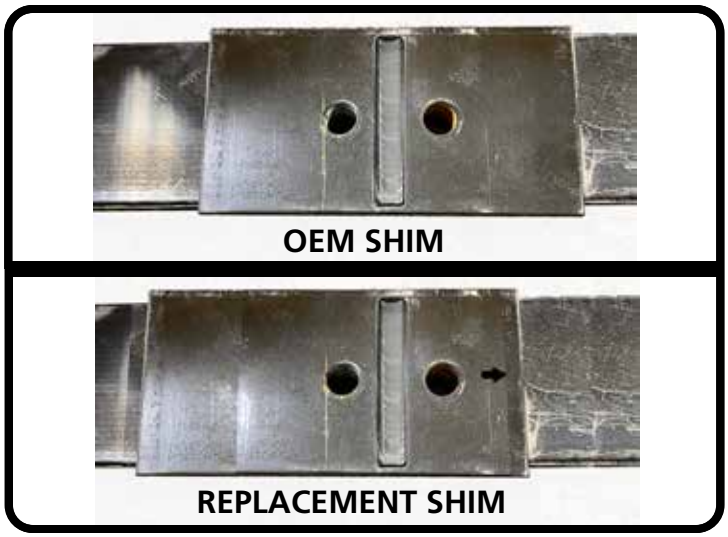

Figure 7

15. Install the new offset shims with the arrows pointing to the front of the truck. Reinstall the locating pins from the TOP side. Reinstall the nuts on the BOTTOM side and tighten (Figure 8).
Torque the nuts to **35 ftlbs.**

Repeat on the other spring.

Figure 8

16. The front leaf spring mounts are stamped with a "D" or "P". The mount is positioned in the truck with the cross tube to the top and the longer tab to the front of the truck. See Figure 9.

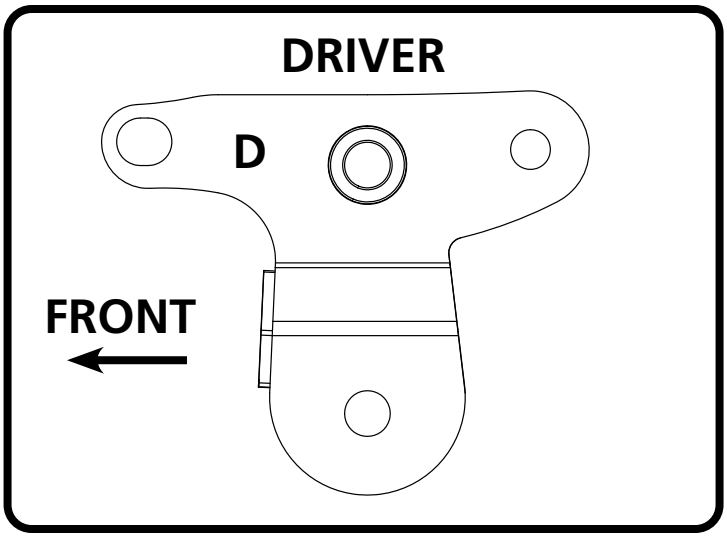

Figure 9

17. Position the bracket into the OEM leaf spring mount. The long tabs will point to the front of the truck. Position the bracket so that the tube lines up with the OEM leaf spring mounting hole.

NOTE: Some trucks may require slight trimming or modification of the lower edges of the OEM leaf spring mount to provide adequate clearance for the new hanger bracket. See the highlighted area in Figure 10.

Figure 10

18. Install an M18 flat washer onto an M18-2.5 x 130mm bolt. Insert the bolt into the OEM leaf spring hole (Figure 11). Secure with an M18 flat washer & M18-2.5 nylok nut on the threads of the bolt.
Do not tighten at this time.

Figure 11

Front Bracket Installation

19. Align the hole in the front tab with the front hole of the OEM leaf spring mount. Install a 3/4" flat washer on a 3/4"-16 x 5" bolt. Insert the bolt/washer through the front hole of the leaf spring mount (Figure 12). Install a 3/4" flat washer & 3/4"-16 thin nylok nut on the threads of the bolt.
Torque to **75 ftlbs**.

NOTE: If the end of the bolt would happen to come in contact with the fuel tank, remove the bolt and add a 2nd 3/4" flat washer on the bolt. In this situtation, a washer will NOT be used under the 3/4"-16 thin nylok nut.

20. Insert the front of the leaf spring in the new bracket. Install a M18 flat washer on a M18-2.5 x 130mm bolt. Align the holes with the inner sleeve of the leaf spring and insert the bolt/washer (Figure 13). Install a M18 flat washer and M18-2.5 nylok nut on the threads of the bolt. Do not tighten this hardware until the truck is sitting on the ground.

21. The adjustable shackle must be attached to the leaf spring **before** mounting the shackle to the frame. If you mount the shackle to the frame first, you will not be able to insert the leaf spring mounting bolt. The bolt must be inserted from the frame side with threads facing outboard (Figure 14).

Figure 12

Figure 13

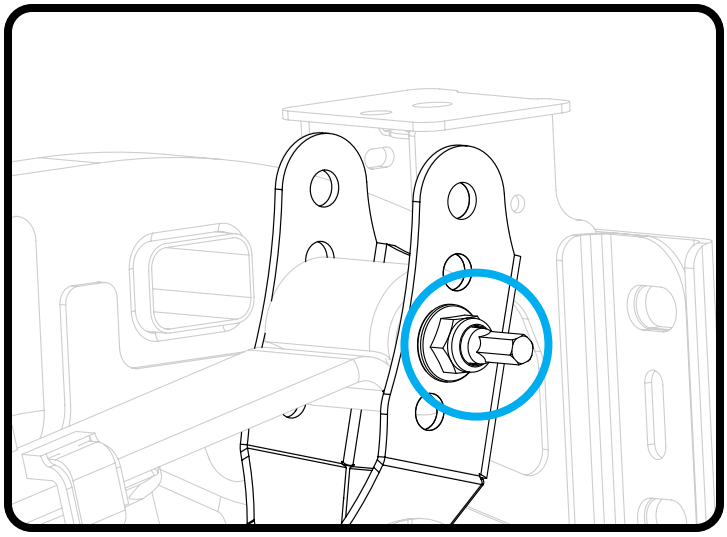

Figure 14

Shackle Installation

NOTE: The adjustable shackle features 4 mounting positions to fine tune your ride height. Figure 15 shows the associated drop in ride height for each position when used in conjunction with Ridetech kit # 12299521.

22. Mount the shackle to the leaf spring using the OEM hardware. The open side of the shackle should be to the front of the truck. Align the holes in the shackle with the through hole of the leaf spring. Insert the bolt/washer through the leaf spring and shackle FROM THE FRAME SIDE. The threads must be facing outboard for proper clearance.

23. To install the shackle to the frame, raise the differential high enough to get the leaf spring in position. Align the holes in the hanger with the inner sleeve of the shackle and reinstall the OEM hardware. Do not tighten the hardware until the truck is sitting on the ground.

Repeat steps on 16-23 on the opposite side.

24. Proceed to installing the axle flip kit. Refer to the instructions included with Ridetech kit # 12299521.

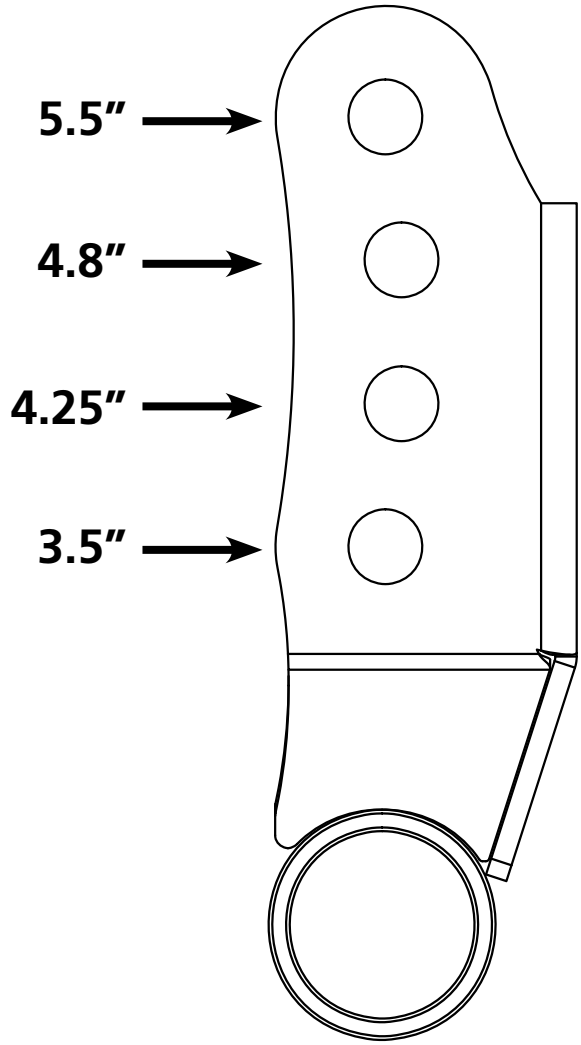

Figure 15

TORQUE SPECIFICATIONS	
LOCATION	**TORQUE**
Leaf Spring Shim Bolts/Nuts	**35 ft-lbs**
3/4”-16 Front Leaf Spring Mount Bolts	**75 ft-lbs**
M18-2.5 x 130mm Leaf Spring Mount Bolts	**258 ft-lbs**