ridetech

Installation Instructions

Part # 12299501 - 2021-Up Ford F150 Headlight Sensor Bracket Kit

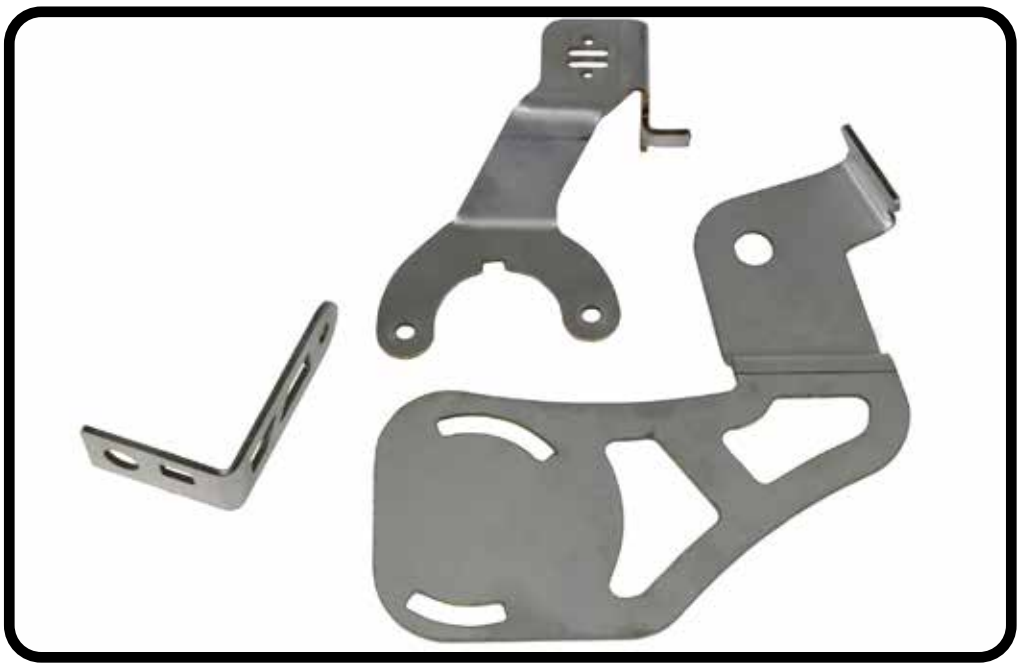

Recommended Tools

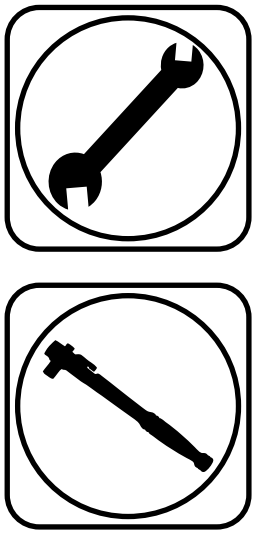

2021-Up Ford F150 Headlight Sensor Bracket Kit

Installation Instructions

Table of contents

Page 2..... Included Components & Getting Started
Page 3..... Front Headlight Sensor Bracket
Page 3-5..... Rear Headlight Sensor Relocation

INSTALL THE HEADLIGHT SENSOR BRACKETS IN CONJUNCTION WITH THE LOWERING KIT.

ridetech

Installation Instructions

Major Components .....In the box

Item #	Part #	Description	QTY
1	70015459	Front Headlight Sensor Bracket	1
2	70015487	Rear Headlight Sensor Relocation Plate	1
3	70015489	Rear Headlight Sensor Axle Bracket	1

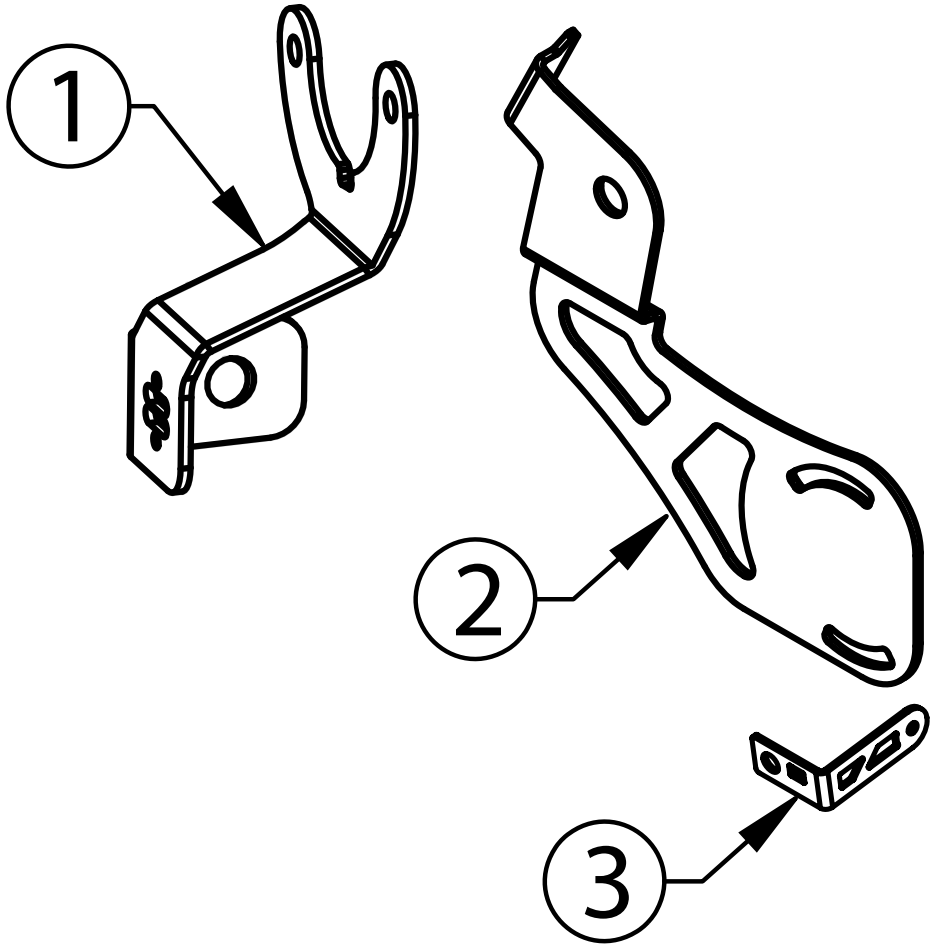

Getting Started.....

THESE HEADLIGHT SENSOR BRACKETS ARE ONLY REQUIRED ON 2021 AND NEWER F150 WITH HEADLIGHT SENSORS. NOT EVERY 2021 F150 WILL HAVE THE HEADLIGHT SENSORS.

INSTALL THE FRONT RELOCATION BRACKET IN CONJUNCTION WITH THE FRONT UPPER CONTROL ARMS.

INSTALL THE REAR RELOCATION BRACKETS IN CONJUNCTION WITH THE REAR LOWERING KIT.

Front Head Light Sensor Relocation Bracket

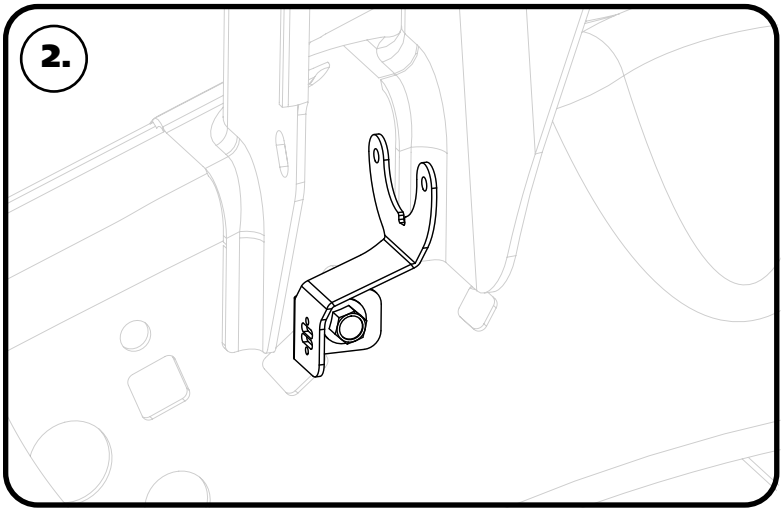

If you are installing the kit on a F150 with headlight sensors, the front headlight sensor bracket will need to be changed. Unbolt the sensor from the front bracket, retaining the hardware. Remove the OEM sensor bracket from the frame and install the new bracket using the OEM hardware.

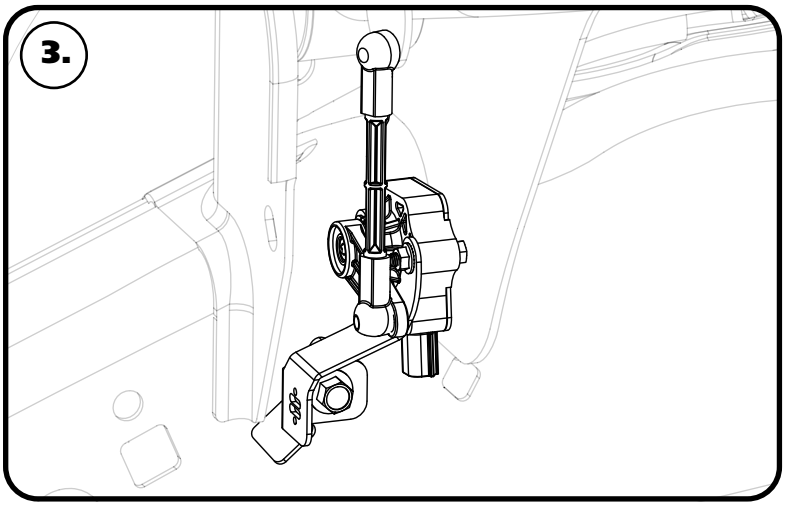

3. Reattach the headlight sensor to the new bracket using the OEM hardware.

Rear Headlight Sensor Relocation

4. Disconnect the headlight sensor linkage from the Drivers side leaf spring mount. Remove the linkage bracket from the axle. There isn't a sensor on the Passenger side of the truck.

Rear Head Light Sensor Relocation

5. Remove the headlight sensor from the frame bracket. Unbolt the frame bracket from the frame. Retain the hardware for reinstallation.

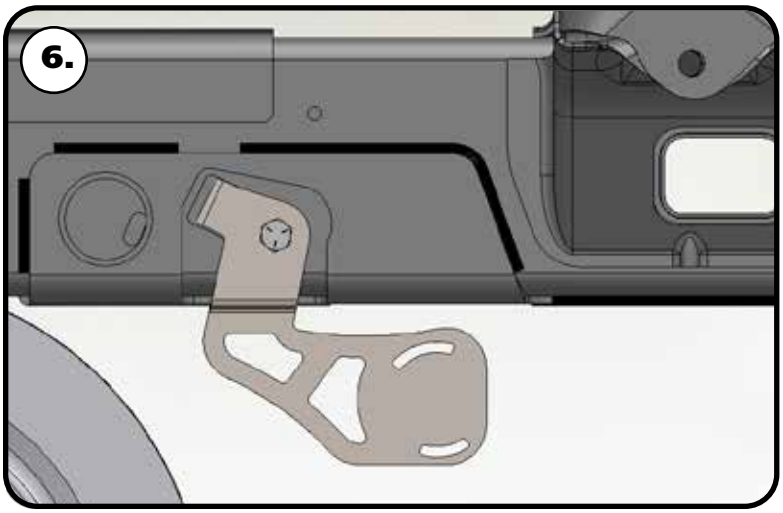

6. Install the frame bracket in place of the OEM bracket using the OEM hardware.

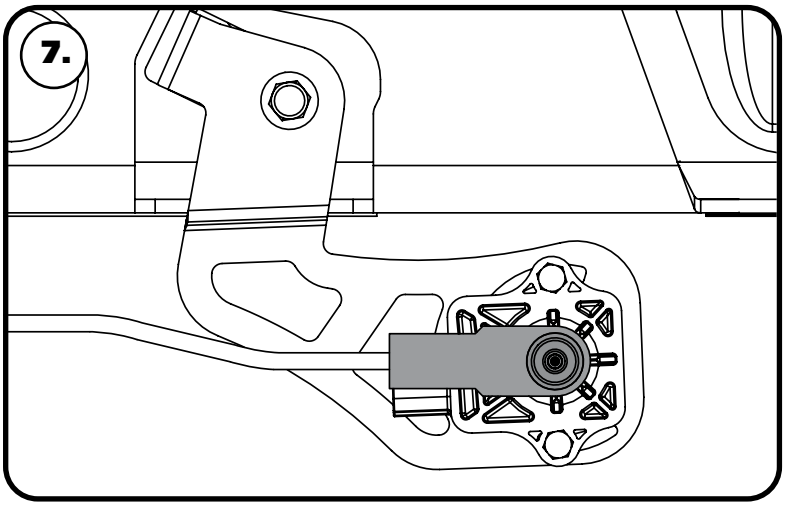

7. Reinstall the headlight sensor on the new bracket using the OEM hardware. The new bracket is slotted to allow for adjustment to set the headlights to your new ride height.

Rear Head Light Sensor Relocation

8. Remove the brake line bracket bolt from the rear of the drivers side leaf spring pad. Retain the hardware for assembly. If you are using the optional air springs, a longer bolt is supplied.

9. The lower relocation bracket is positioned under the brake line mount. The tab of the brake line mount needs to be engaged in the bracket and leaf spring pad. Reinstall the OEM hardware if you're not running the helper air spring kit. If you are using the helper air spring kit, use the supplied M8-1.25 x 30mm bolt and M8 flat washer. Torque to 169 in-lbs.

10. Reattach the headlight sensor linkage to the new bracket.

11. The rear headlight sensor will need to be adjusted for your new ride height.